ANKITS ANK *the authority in high end audio kits*
15 YEARS OF ANKITS 2004-2018

DAC2.1 *Signature*

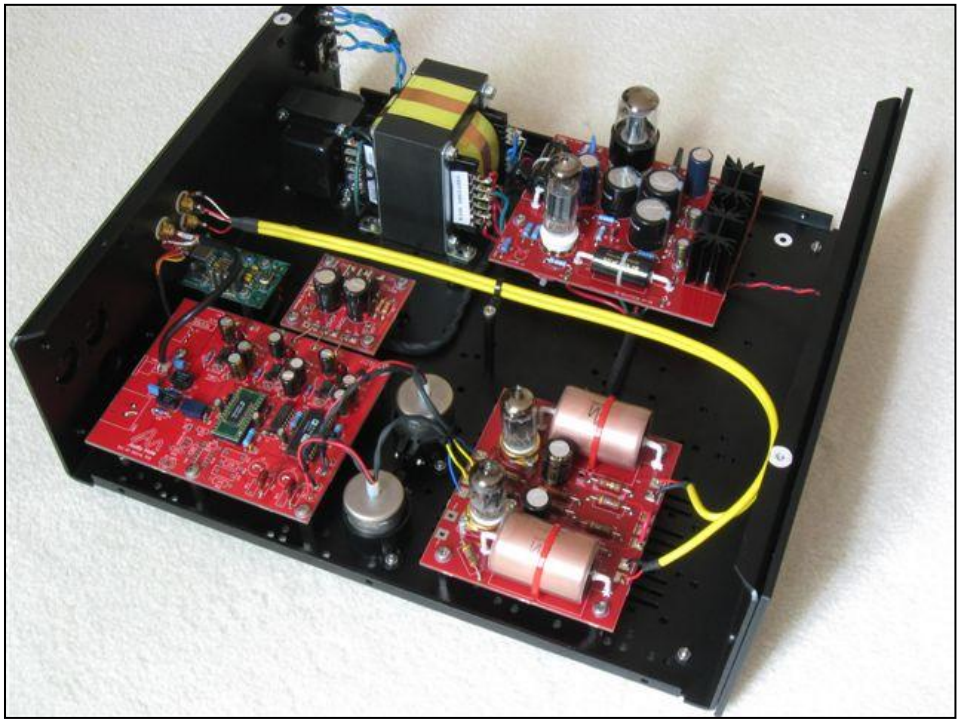

Construction Manual

Version 6.11, June 2019

audionotekits@rogers.com

1-613-822-7188

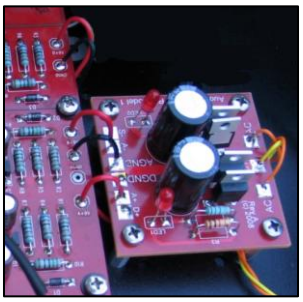

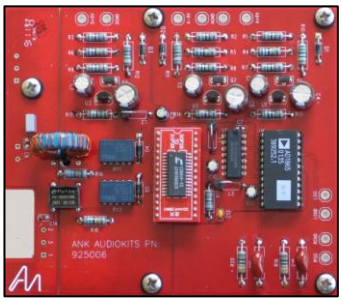

Table of Contents

www.AudioNoteKits.com
audionotekits@rogers.com

www.AudioNoteKits.com
audionotekits@rogers.com

www.AudioNoteKits.com
audionotekits@rogers.com

www.AudioNoteKits.com
audionotekits@rogers.com

Section 1

Introduction

Thanks for purchasing the ANK Audio Kits DAC 2.1 Signature. Our goal is to provide you with the highest quality kit that you will build from scratch with these instructions.

This is very high end and sophisticated piece of audio equipment that will surely become a showpiece of your sound system. We're excited that you have chosen to join us in enjoying and appreciating superb audio and we've created this manual to help guide you through each step of the assembly process with as much detail and clarity as possible. To facilitate the build process, the manual has been divided into a number of sections, each focusing on a separate aspect of the system: follow the sections in order and we guarantee you not only a problem-free experience, but a pleasant time doing so. If you are new to building kits, or if at any time you feel as though you need help or advice, feel free to contact us and we will do whatever it takes to get you on the right track.

www.AudioNoteKits.com
audionotekits@rogers.com

1.1 About ANK Audio Kits

Audio Note (UK) started out in the early '90s developing several DIY audio kits while they were building up their finished product business. DIY Audio has a long history and it was an opportunity for knowledgeable customers to take advantage of world class designs and components. Audio Note (UK) was focused on using the very finest materials and components custom-made to their specifications, across their entire product line — from custom film and electrolytic capacitors to tantalum resistors, transformers, binding posts, wires, etc. The Kit1 300B Single Ended integrated amplifier was born during development of the Meishu and it proved to be extremely popular worldwide. The ANKit business was born!

As the finished product business and dealer network started to flourish, Audio Note (UK) eventually moved the kit business off into a separate division; thus, in 2004, Audio Note Kits started up and was supported by a website so that customers not located near Audio Note (UK) dealers could order kits and have them shipped direct. Kit development continued in earnest during the 2000s with development assisted by Audio Note (UK) engineering. Audio Note (UK) parts were used throughout the kits, depending on the various levels and budgets. By 2013, ANK Audio Kits (as it came to be called) had developed a wide product range covering all areas of two channel audio: a single-ended 300B product line, an EL34 and EL34 classAB and single-ended product line, digital to analog converters, pre-amplifiers, Phono stages, and Audio Note (UK) speaker kits. The end result today is that customers worldwide with DIY skills can now build an entire high end audio system to their liking. With the introduction of higher levels in 2013 and the release of the Level 5 Mentor Pre-amplifier and the DAC 5.1 Signature, some customers wanted these high end products assembled by a professional builder. As a result, ANK Audio Kits began offering this service for Level 4 and 5 products so that a significant investment in a kit could be turned into a work of art! Since ANK Audio Kits was born in 2004, over 2,500 kits have been shipped to customers worldwide. Clearly, there is a real demand for high end audio kits and ANK Audio Kits has been delivering the goods now for 15 years.

We believe and hope that you will have a great experience building your kit and we look forward to hearing from you about your experience.

Regards,

Brian Smith — Director ANK Audio Kits

www.AudioNoteKits.com
audionotekits@rogers.com

1.2 Basic Operation of the DAC

1.2.1 Overview

The ANK Audio Kits DAC 2.1 is one of our longest running products with a significant following. Originally developed as the DAC 2.1A and DAC 2.1B variants, we now have concentrated production on the upgraded variant that is now known as simply the DAC 2.1 Signature. The DAC 2.1 Signature offers velvet smooth operation with no digital artifacts or treble edge. Following the Audio Note (UK) tradition of non-oversampling resistor ladder architecture (R-2R) pure digital to analog conversion method, it hard-wires digital information directly to output voltage.

The DAC 2.1 Signature boasts numerous features and supports up to 24/96kHz data and sampling widths. The DAC has the very high quality M2 Power Supply (6X5 rectified and ECL82 regulated) for ultimate smoothness and, to complete the pure digital to analog design, the Digital DAC board has no analog filtering (which has been completely removed) with no digital artifacts for a smooth-as-velvet output. Even though the DAC 2.1 Signature is our lowest priced DAC, this enhanced variant — with its upgraded power supply, Audio Note (UK) tantalum non-magnetic resistors, and Audio Note (UK) Copper Foil Capacitors — hits well above its price point and is a true audiophile DAC in its own right.

Design Elements

Audio Note (UK) realized at a very early stage that when it comes to the digital-to-analog conversion phase, simplest was best. Although many manufacturers' DACs may measure well on the test bench using upsampling or oversampling techniques, the Audio Note (UK) method of no oversampling (also referred to as 1x Oversampling), direct-from-disk technique simply sounds better. This method means that no digital filtering is performed on our DACs. What's more, analog filtering has also been eliminated from our designs to yield yet another improvement over the accepted (Delta-Sigma) norm.

Delta-Sigma DACs and R-2R resistor ladder DACs are quite different. Rather than using feedback loops and high frequency oversampling clocks to produce an approximation of the digital data as Delta-Sigma types do, an R-2R DAC will turn on each required bit in the digital 'word' and the precise amount of current will flow from the chip to reconstruct the analog waveform. This method is simple, elegant, and perfect, and its true representation of the digital data is reflected in the uncompromised sound quality. The DAC 2.1 Signature digital board comes fully assembled and includes a digital input transformer.

www.AudioNoteKits.com
audionotekits@rogers.com

Further, the DAC 2.1 Signature's I/V transformers couple and maximize energy transfer during the current-to-voltage phase of the conversion from the digital converter to the analog section, resulting in increased dynamics. These transformers were specially designed by Audio Note (UK) engineering.

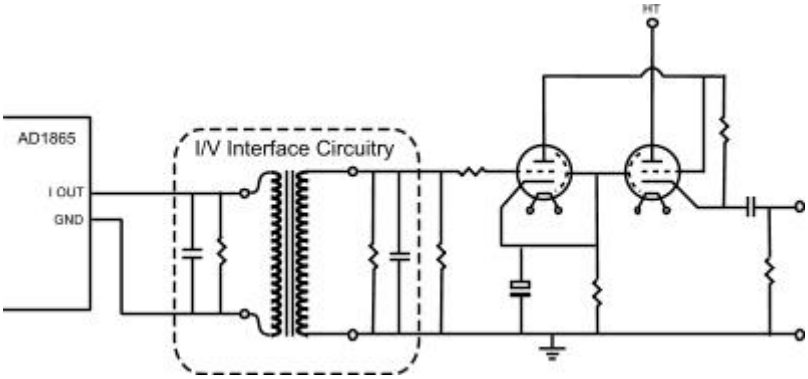

The Analog (6922) board features Audio Note (UK) non-magnetic tantalum resistors and Audio Note (UK) Copper Foil Capacitors. An efficient and effective line stage complements the digital and power supply sections of the DAC, sounds very undigital and has a lovely natural sound.

Our highly acclaimed and upgraded M2 Power Supply is an enhanced PCB version of the original M2 Power Supply taken from Audio Note (UK)'s finished products line. It uses a Mains transformer and Choke combination with a 6X5 for tube rectification and an ECL82 for regulation of its HT supply It also provides two solid-state filament supplies. This latest version uses vertical heatsinks, Mundorf MLytic capacitors, Rubycon electrolytics, and Takman 1W resistors. We believe the M2 Power Supply provides an excellent quality / value ratio — it has also proved itself in terms of both its reliability and sonic virtues many times over in our other product lines. In addition, we have a dedicated digital power supply board to ensure the sensitive digital circuits are fed with a smooth and quiet supply of power.

www.AudioNoteKits.com
audionotekits@rogers.com

1.2.2 Component Placement

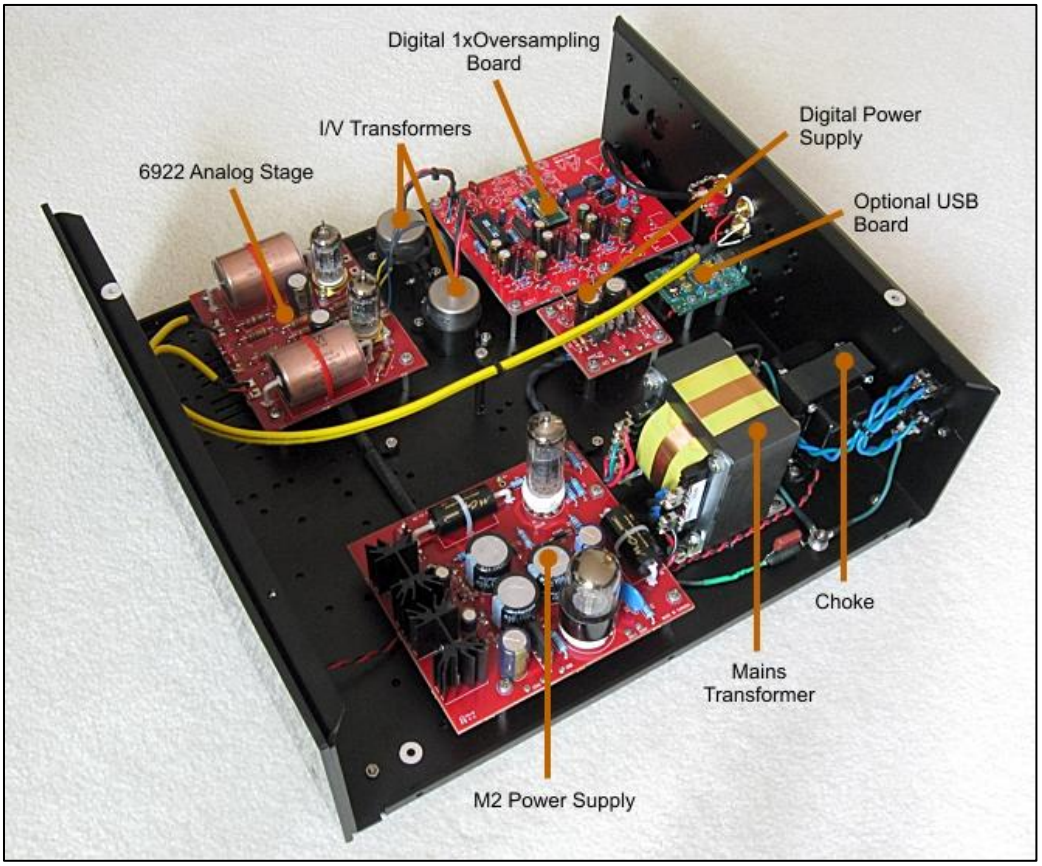

Here's a completed DAC 2.1 Signature

www.AudioNoteKits.com
audionotekits@rogers.com

1.2.3 Block Diagram

The graphic below shows the block diagram overview of how the DAC works:

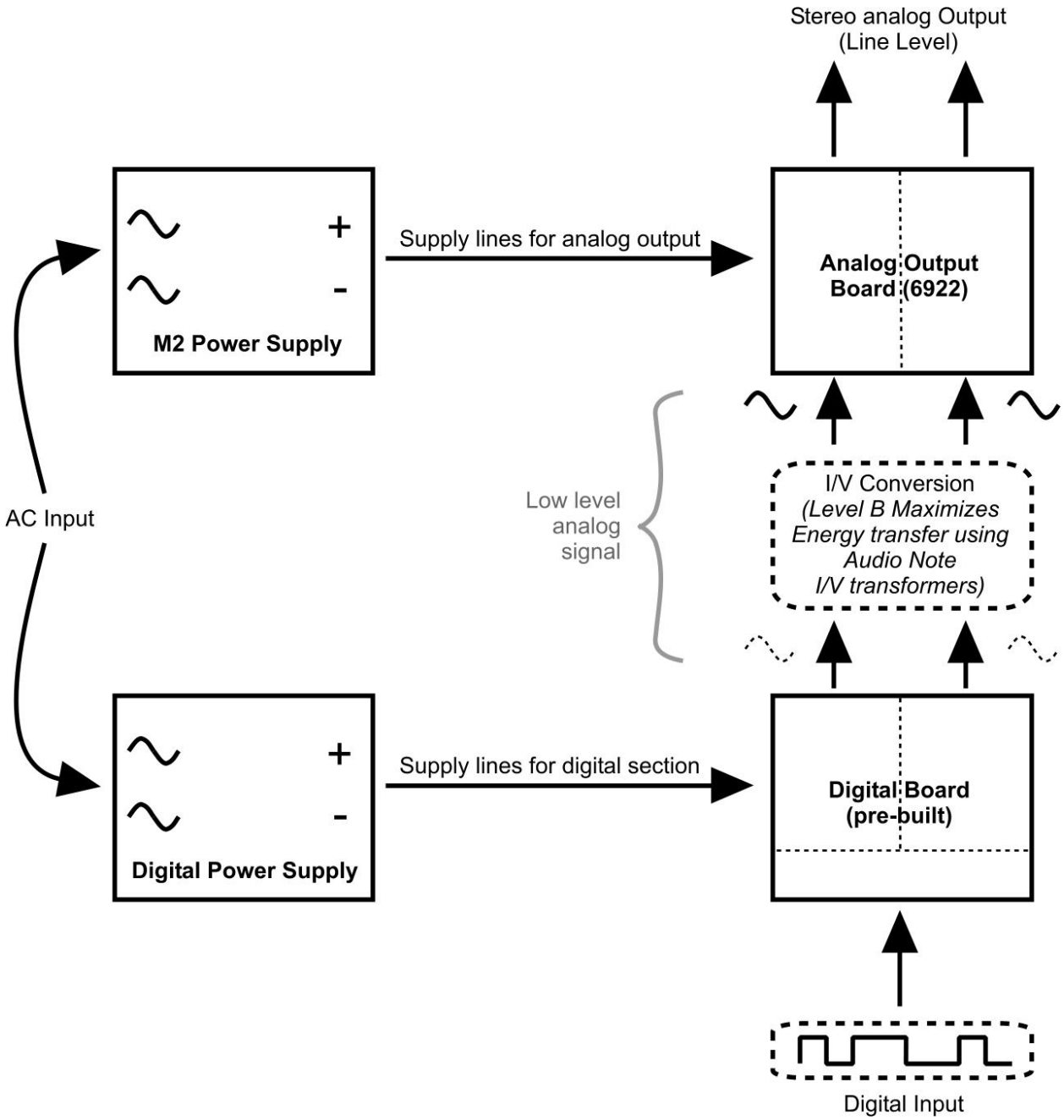

www.AudioNoteKits.com
audionotekits@rogers.com

1.3 Equipment

Here is the list of equipment that will be required:

- Philips screwdriver
- A pair of quality wire strippers
- A large, organized work area
- Soldering iron station with wet sponge
- Lead-based solder (4% Silver is recommended)

1.3.1 Overview of the Kit

In your kit you will find a series of kit bags containing all the hardware, wire, and parts for the associated sections of the amplifier. See the Parts List files on the disk to match up the parts in the kit bags with the lists. There is also a Master list for the kit.

1.4 Tips and Suggestions

We have learned a lot about kit building over the last decade from our customers and I'd like to share some tips with you to ensure a successful project. Please read through this section thoroughly, it will give you a good idea of what's ahead and help ensure your success!

1.4.1 Soldering

We highly recommend using lead-based solder with some silver content[1] on the build. You should use lead-free ONLY if you are experienced using it and confident. Lead-free solder requires a higher melting temperature and thus is more difficult to use. We don't recommend lead-free solder for first-time builders.

We suggest that you practice your soldering before starting on the kit. Feel free to request practice parts with your kit so that you can practice tinning wires and making nice solder joints. The key is a good soldering station with a sponge, the right temperature, a good size tip, and experience; remember, tips can wear out so make sure your tip is working. (You can also check out YouTube videos for soldering lessons and examples.) The solder should flow freely; if it's forming balls then there is likely a problem with the tip, the temperature, or (sometimes) the surface. Feel free to contact us for help!

[1] For example, WBT-0800.

www.AudioNoteKits.com
audionotekits@rogers.com

1.4.2 Components

Using the Ohm setting on your multimeter is very useful when building a kit. It's a good, practical way of measuring resistors and continuity and is much easier than reading the color codes on the side. (With practice, the color codes can also be a good way to determine the resistance, but that method is better left to experienced builders.)

1.4.3 Resistor Sizes

Resistors today, particularly metal film resistors, are often smaller than you might expect. It used to be that the difference between a 1/2W and a 1W resistor was obvious: the 1W was considerably larger. That way of looking at things sometimes now no longer applies. Please be assured that all resistors supplied with ANK Audio Kits are rated at least per the specified wattage: in some cases, a higher than specified wattage may be supplied.

1.4.4 Capacitor Manufacturers and Voltage Ratings

Occasionally, depending on parts availability, we may use capacitors from different manufacturers. These will always be of equal or higher quality! As a result, some of the pictures in the manual may look a bit different at times. With regard to voltage ratings, normally, the voltage rating of the supplied capacitors will be exactly what you see on the parts lists. Occasionally, a part may be supplied with a higher voltage. Think nothing of it!

1.4.5 Electrolytic Capacitors

For those who have not built a piece of electronics before, here is a little lesson on capacitors. There are basically two types of capacitors that we use in the kits: electrolytic and signal capacitors. Of these, electrolytic capacitors require special attention. Electrolytic capacitors are "polarized," which means they have a POSITIVE (+) and a NEGATIVE (–) lead and typically have values like 100uf 450V, 10uf 160V, or 470uf 35V. *These capacitors need to be installed correctly or else they will possibly blow up at some point!*

Each electrolytic capacitor will have a *wide stripe* on the NEGATIVE side. Always ensure that this stripe (NEGATIVE) is positioned correctly. There are several keys on a printed circuit board to help you to know how to position the capacitor:

1. There may be a "+" on the board indicating where to position the POSITIVE lead.
2. The segmented half of the circular stencil on the board shows where to position the NEGATIVE lead. The unsegmented ('half-moon') part of the circle is where the POSITIVE lead goes.
3. The POSITIVE lead goes to a square solder pad while the NEGATIVE lead goes to a round solder pad.

www.AudioNoteKits.com
audionotekits@rogers.com

1.4.6 Diodes

When installing diodes note that they are oriented with a stripe — *match the stripe on the diode with the banding (|||) stencil on the board.*

1.4.7 Hardware/Mechanical

Not all of us are mechanically oriented. So, the kit is well laid out such that all the hardware is provided and bagged in individual sections, so things should make sense. Start thinking mechanically because about a third of the kit is mechanical. The first thing to remember is that good hardware is beautiful: we use all stainless steel metric hardware in the kits. It truly is a thing of beauty: don't rush your hardware! Here are a few helpful things to understand:

- We use British metric hardware (M3, M4, M5, screw size 10mm, 15mm, etc..) as opposed to the American imperial system (5/1000th or 50/1000th, 1 inch, 3/4 inch). Please familiarize yourself with the hardware in the kit.

- The screws will be called M3 or M4, which is the diameter of the shaft. The length of the shaft will be in millimeters, so you will encounter things like an M4 screw 16mm, a PAN head screw (which is a round spherical head), or a COUNTERSUNK or FLAT head screw (a screw head that needs to be flush with a surface — for example, under a transformer). So if you are asked to use an M3 16mm CSK screw, this is an M3 size (obviously), which is a thinner shaft diameter than an M4; 16mm is the length of the shaft; and the head type is CSK, which is a countersunk or flat head screw.

- Once you have the screws mastered, look at the matching nuts such as M4 nut or M3 nut and corresponding washers.

- Standoffs are common in the kits (again, they are either M3 or M4 size, with different lengths). They are typically threaded, so the screw goes into them.

- If any of the hardware is confusing or something is not fitting right, please email us.

1.4.8 Wire Stripping and Tinning

When it comes to wires, we typically use 18 gauge (thicker) and 22 gauge in the kits. It's PTFE: Teflon silver-plated copper wire. Basically this is classed as hook-up wire; we typically twist wire for you when it needs to be. The other wire we use is called shielded cable, like an AN-A (Audio Note (UK)) for signals. This is two-conductor wire: one is for the signal and the other (a big ground braid wrapped around the signal wire) is the shielding, which helps prevent the cable from picking up noise. You should practice stripping some 18g or 22g wire, and then try tinning this wire; this is the process of adding solder to the bare wire so that the invisible coating on the wire is burned off. This makes for easy soldering to a PCB, an RCA connector, or a transformer terminal. So it's a good idea to practice this a little before starting the kit.

1.4.9 Wire Color

In the earlier sections of this manual, particularly those sections dealing with the Mains transformer and Choke wires, the colors of the wires should match the color of the wires in your kit. If they don't, or if you're unsure about things, contact audionotekits@rogers.com. Later on, at the Interwiring stage, there may be some differences between the descriptions (or pictures) of the color of wires that you will connect and the color of the wires supplied with your kit; for example, depending on inventory, we may supply a Black–Red twisted pair instead of a Green–Red (or vice-versa). Don't worry! Just be sure to check the wiring diagrams carefully and connect the correct points together and all will be well!

1.4.10 Optional Finishing Touches

From time to time we get asked about some of the build details of the ANK Finished Products that you can see in the pictures in the "Assembled Kits Gallery!" (https://ankits.smugmug.com/) on our website. It's important to understand that these stunningly beautiful products were done by an accomplished professional builder with decades of experience and that some particulars of the build may be beyond most of us. However, experienced builders who want to incorporate some of these finishing touches should feel free to do so. While we don't officially support or supply parts for these optional enhancements, there's no reason why you couldn't or shouldn't do them if you want to and feel that you can handle them. Without getting into the details (you're on your own here), what you'll want to get hold of are: heatshrink (to bundle wires), cable ties (to secure large capacitors), stacked (male/female) standoffs and cable clamps (to elevate and secure signal cables), and cable sleeving. You can get some of these from your local hardware store (for example, 1/4" Cable Clamps) and other, more specialized, parts from online distributors such as Grainger, Digi-Key, Mouser, or Cable Ties and More. If you do decide to dress your build with some of these, please send us a picture or two. We'd love to see what you did!

1.5 Build Process

1.5.1 Some Good Rules of Thumb for Building Your DAC

1) Take your time, prepare, and try and work on a small task each time you start to build the kit.
2) Instead of rushing through another section — use the end of your session to check your work. Always ask yourself if the step you are performing makes sense.
3) Have fun with your build and savour the experience. Take the time to do a really good job!
4) Feel free to contact us via email audionotekits@rogers.com if you have any questions or suggestions during your build — and feel free to send us pictures, etc. We'd be pleased to give you tips along the way.

1.5.2 Organization of this Manual

We have divided the build and the manual into the following sections:

1. Introduction
2. Mechanical Assembly and Initial Mains Transformer Wiring
3. M2 Power Supply
4. M2 Power Supply Testing
5. Digital Power Supply Board
6. Analog Board
7. Analog Board Filament and HT
8. Installing the Digital DAC Board
9. Interwiring the Digital DAC Board
10. Installing the I/V Transformers
11. Installing the Rear Faceplate and Connectors
12. Wiring the Output Connections
13. Turn-on Procedure
14. Finishing Touches
15. Final Thoughts

Appendix

www.AudioNoteKits.com
audionotekits@rogers.com

Here's another way of looking at how the manual is organized and how the sections fit into the 'big picture': the main sections are mapped so that they mirror how the components will be positioned in the DAC chassis:

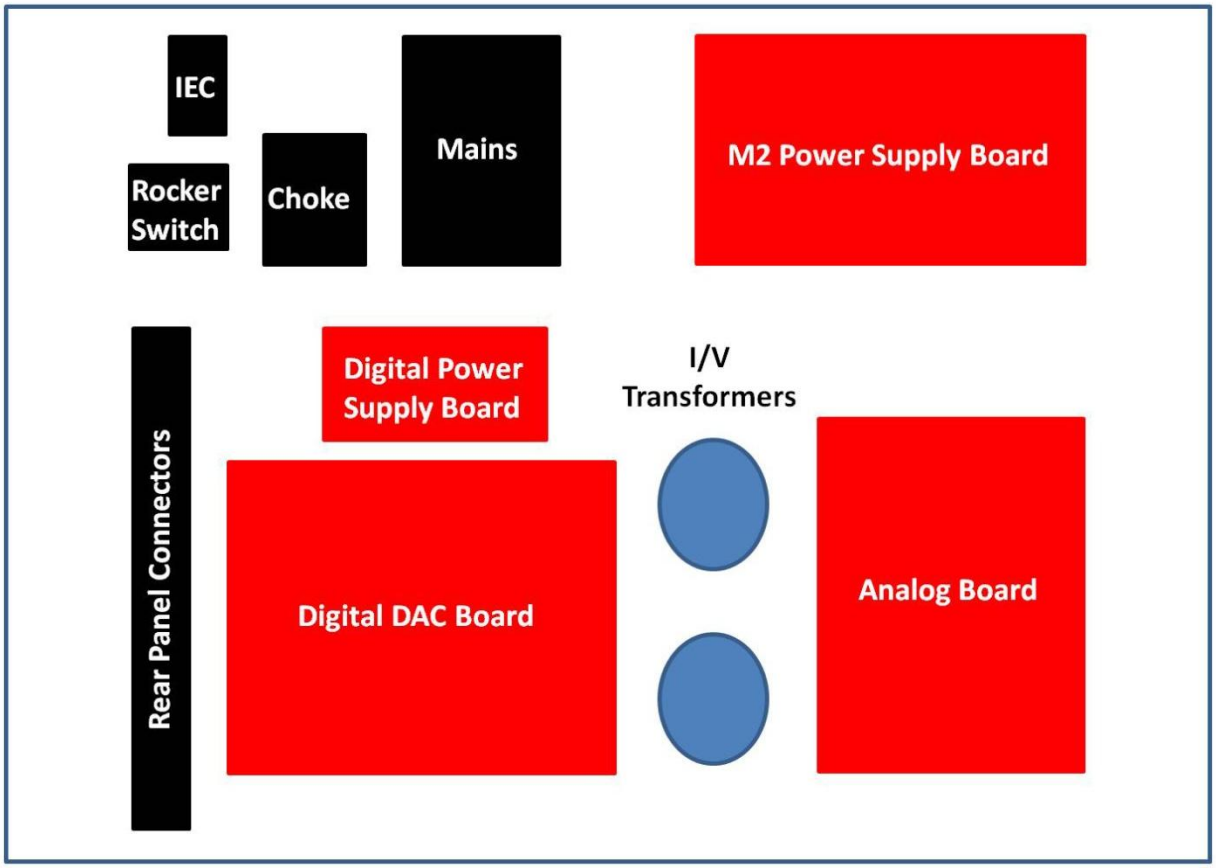

www.AudioNoteKits.com
audionotekits@rogers.com

1.5.2 Electrical Safety Warning

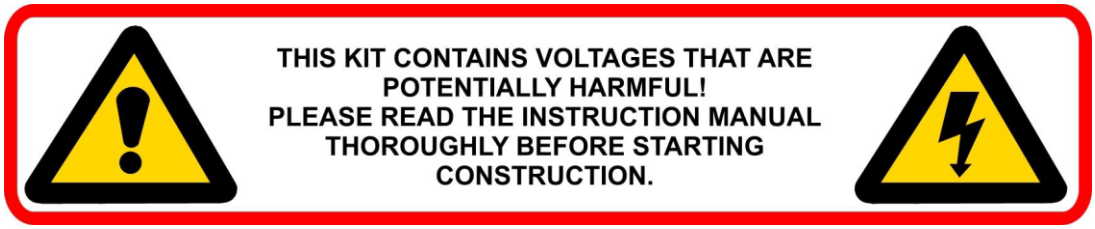

Please be aware of proper electrical safety.

There are sufficient voltages in this kit to give you a very nasty and harmful shock, so be careful when powering on, debugging, and probing around.

Please contact ANK Audio Kits via phone or email (audionotekits@rogers.com) to discuss any precautions necessary when building the kit if you feel unsure about what you are doing at any stage of the build.

Section 2

Mechanical Assembly and Initial Mains Transformer Wiring

2.1 Overview

In this section we will install the feet, IEC socket, rocker switch, and the Choke, as well as make the important initial connections to the Mains transformer and install it in the chassis.

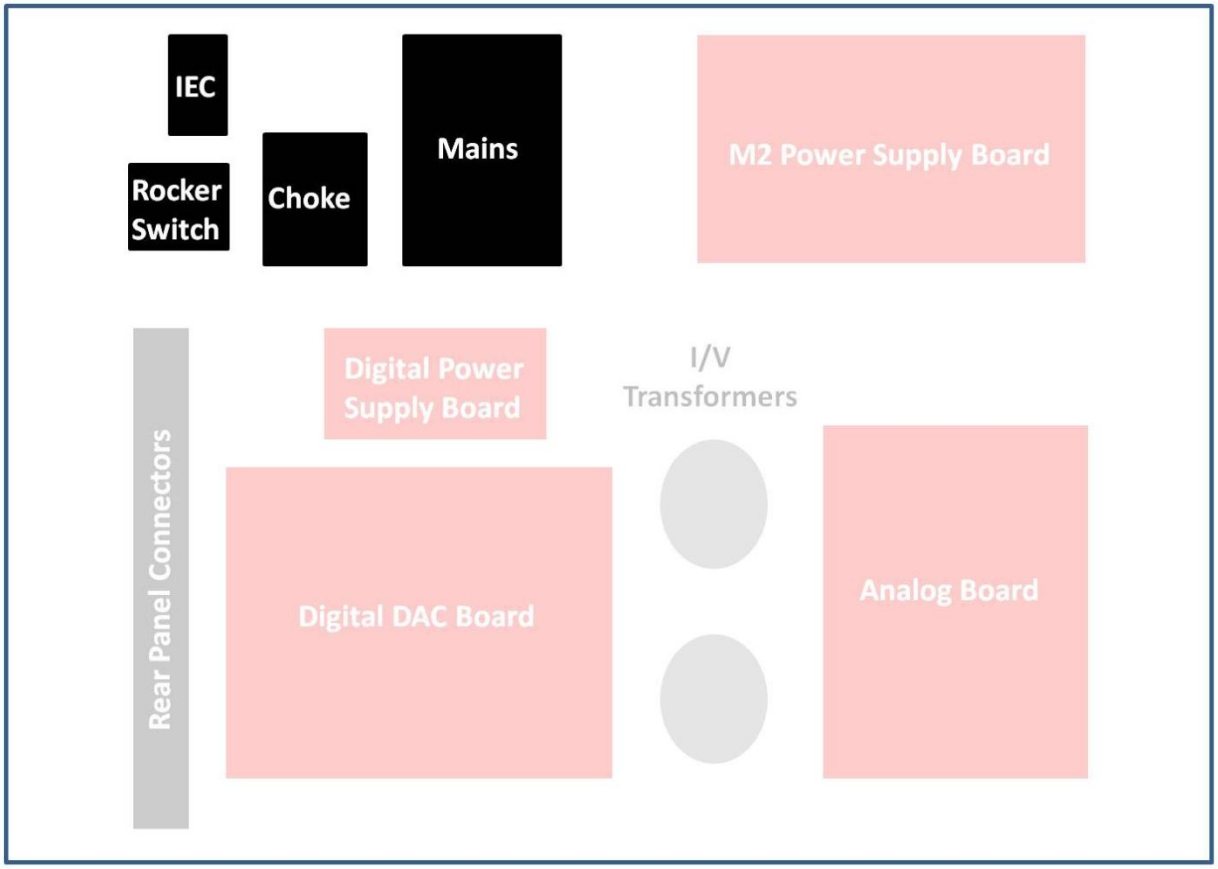

When you receive the kit you will have a series of kit bags. In the following sections we'll be using the:

- Hardware bag (made up of individual bags for each section of the kit)
- IEC bag (containing the Rocker Switch, IEC and premade cables, fuses, etc.)

www.AudioNoteKits.com
audionotekits@rogers.com

2.2 Installing the Feet

Let's start by installing the feet on the chassis — this will make it easier to work with as we install the transformers, Choke, etc.

- ☐ Turn the chassis upside down.
- ☐ Take a foot and insert an M4 screw with washer into the foot — it'll be tight but push it in.
- ☐ Install each foot in the hole in the chassis closest to the corner and secure it with an M4 nut on the inside of the chassis. Don't overtighten the screw; you could damage the foot.

www.AudioNoteKits.com
audionotekits@rogers.com

When completed your feet will look like the picture below. You're on your way!

www.AudioNoteKits.com
audionotekits@rogers.com

2.3 Installing the Choke

We're about to start on the first major section of the Power Supply, including the installation of the Choke, the chassis ground, IEC, and rocker switch, and the preparation of the Mains.

Let's begin by installing the Choke. This looks simple, but given the tight clearance between the Choke and the back of the chassis, it can be a bit frustrating. Here's a suggested way to go about it:

- ☐ Arrange for good lighting from above so that you can see well, especially towards the rear of the chassis.
- ☐ Neatly lay out the necessary hardware close at hand:
  - 4 M4 screws
  - 4 M4 washers
  - 4 M4 Keps K-Lock Nuts (these are M4 nuts with attached locking washers)

www.AudioNoteKits.com
audionotekits@rogers.com

- ☐ Turn the chassis right side up.
- ☐ Take the Choke — which is marked CH-180 underneath — and hold it in one hand in mid air while you install the four M4 screws and washers from above into the four holes on the base of the Choke, so that you can then insert the whole unit into the chassis.

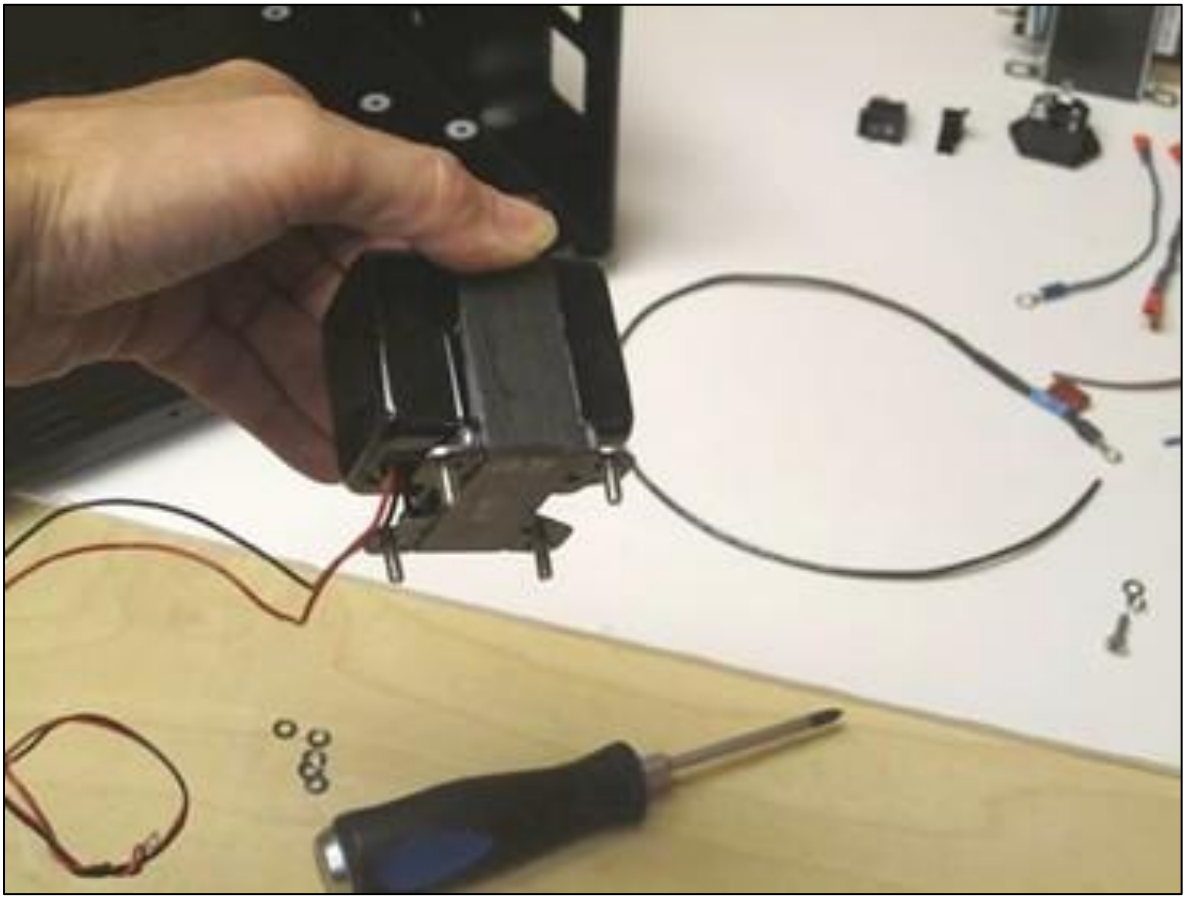

www.AudioNoteKits.com
audionotekits@rogers.com

- ☐ Carefully lower the Choke, with the leads pointed toward the middle of the chassis (as shown below) and with the screws and washers in place, into the holes in the chassis. The critical need is to get the 2 crews at the rear to go through the correct holes. If the other 2 screws (the ones towards the interior of the chassis) fall out, just leave them for a moment.

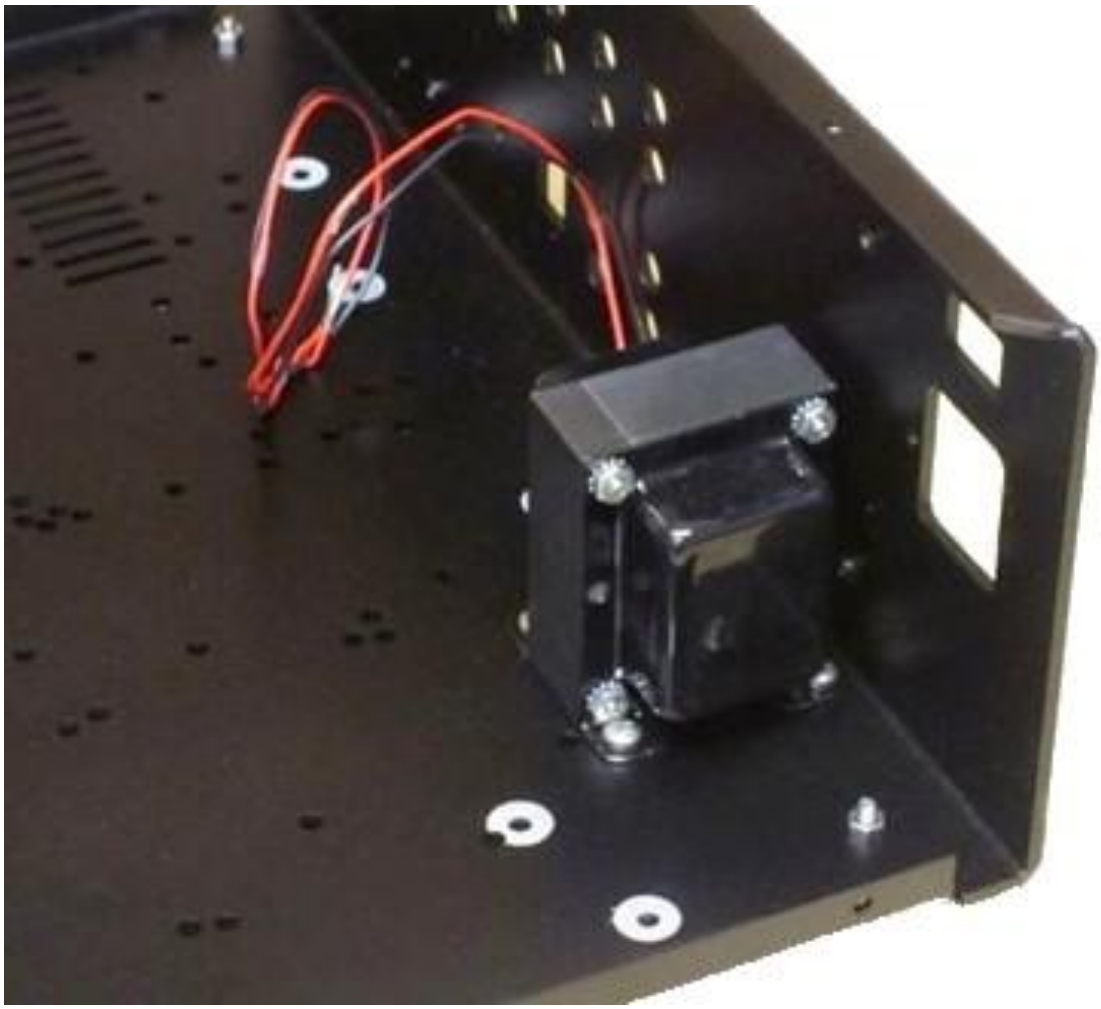

- ☐ Do not turn the chassis over.
- ☐ With at least the back 2 screws now through the bottom of the chassis, successively push down on each screw from above with one hand while simultaneously securing the screw to the chassis from underneath with the lock nuts with your other hand.
- ☐ Finish up by tightening things up from below with a pair of pliers.

www.AudioNoteKits.com
audionotekits@rogers.com

When installed, the Choke should be positioned as shown below:

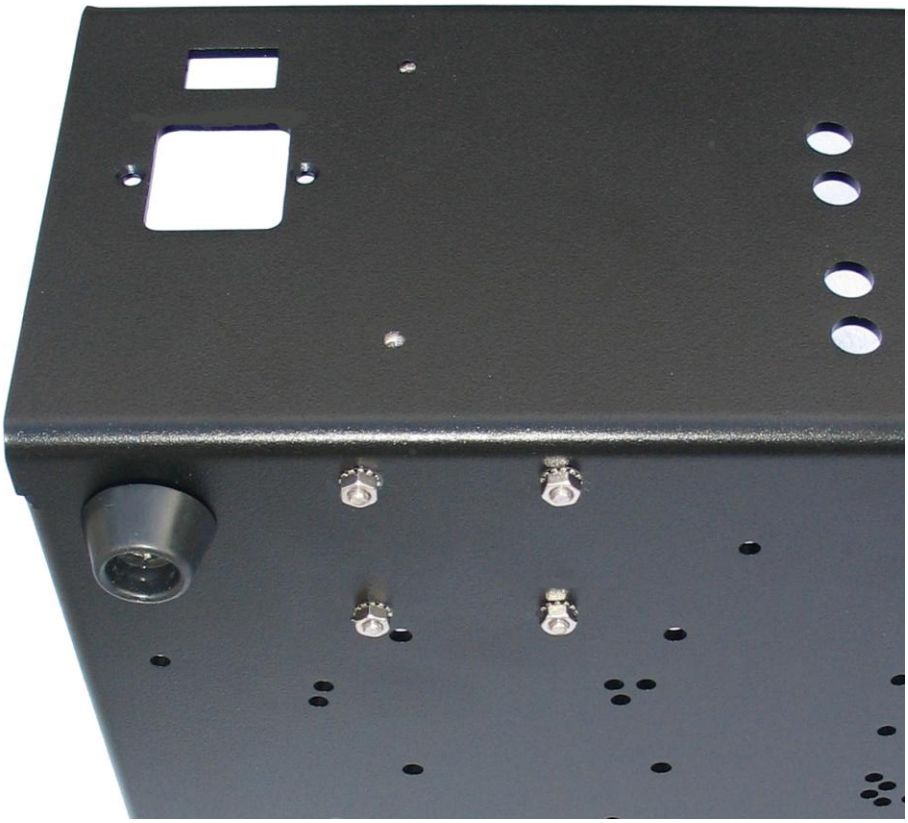

Time for a break!

www.AudioNoteKits.com
audionotekits@rogers.com

2.4 Installing the Chassis Ground

- ☐ Install an M4 16mm PAN head screw, washer, and nut into position in the unpainted area on the chassis near the Choke, as shown below. This will act as the chassis ground.

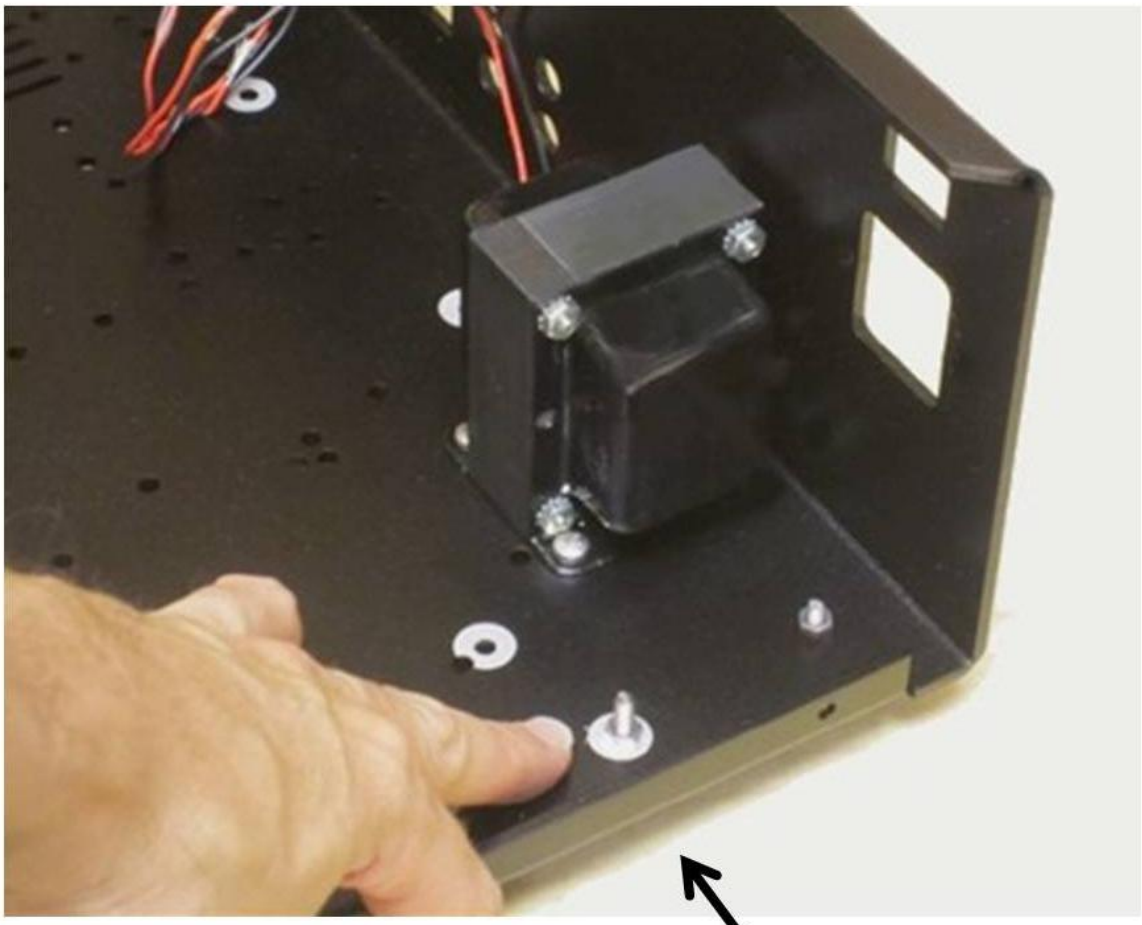

Chassis Ground

www.AudioNoteKits.com
audionotekits@rogers.com

2.5 Installing the IEC Socket and Rocker Switch

- ☐ Take the IEC socket and install it in position as shown below, with the fuse holder on top and the GND on the bottom. Use M3 10mm CSK flat head screws to secure it using M3 nuts.

➡ *Have a look at the picture below: Note the orientation of the rocker switch with the smaller pair of tabs towards the side of the chassis and the larger pair towards the middle.*

- ☐ Install the self-locking rocker switch by pressing it in from the back of the chassis; it will snap into position.

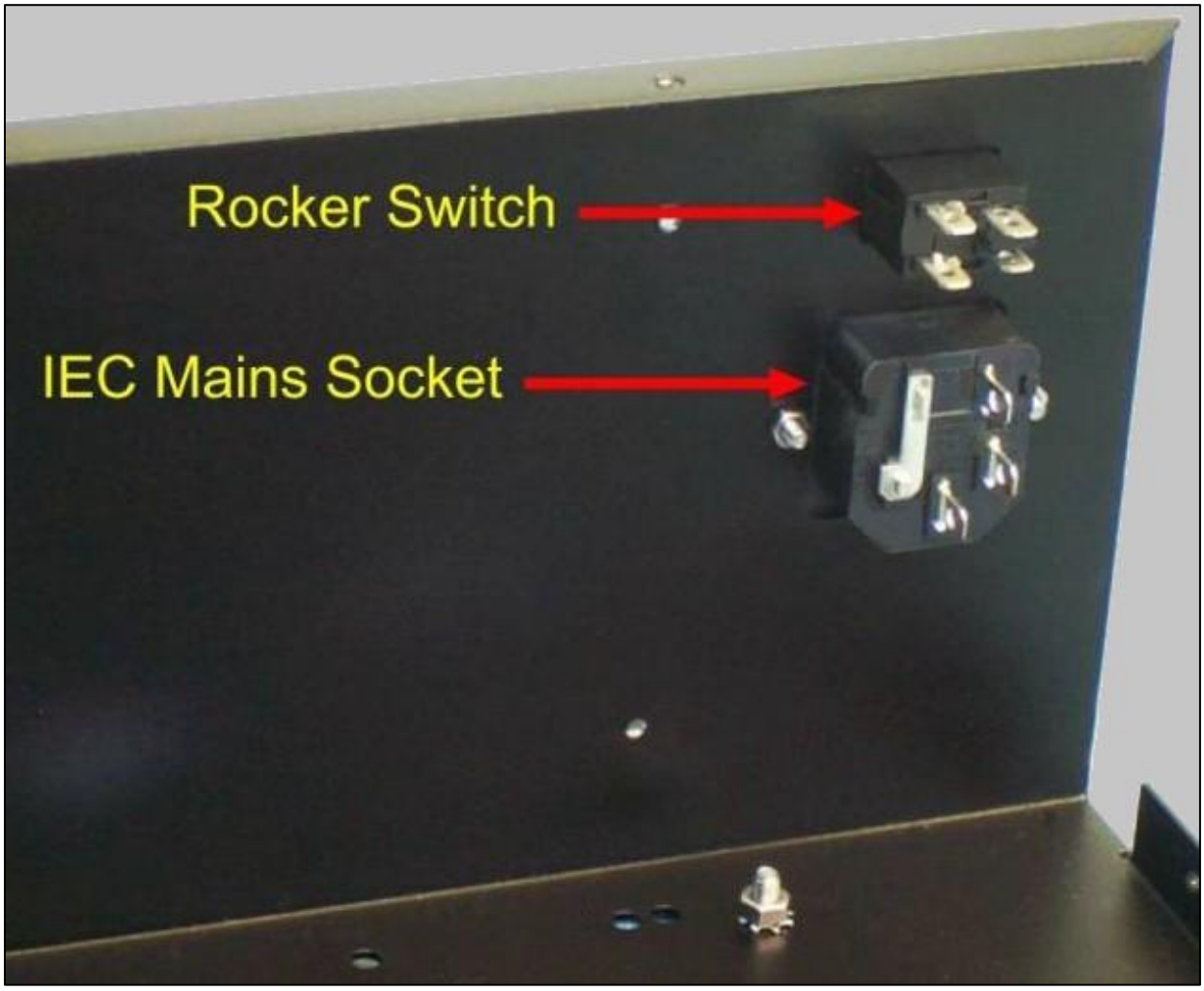

The correct orientation of the IEC and Rocker Switch

www.AudioNoteKits.com
audionotekits@rogers.com

Here's a view of the rear of the chassis:

2.6 Mains Transformer Preparation

Now we'll prepare the Mains transformer — we'll do this *outside* of the chassis. Once all the wires are added it will be easier to install and secure in the chassis.

The Mains transformer is a complex device: its primary can be configured for many world voltages and its secondary supplies a number of voltages for different needs throughout the DAC. It's important to understand what these connections are and where they're located. We recommend that you hold the transformer while looking at the three diagrams below to familiarize yourself with 'what goes where'.

www.AudioNoteKits.com
audionotekits@rogers.com

Mains Primary and Secondary Tabs Configuration

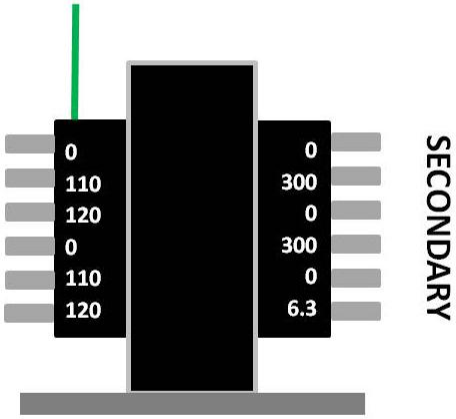

Mains Transformer

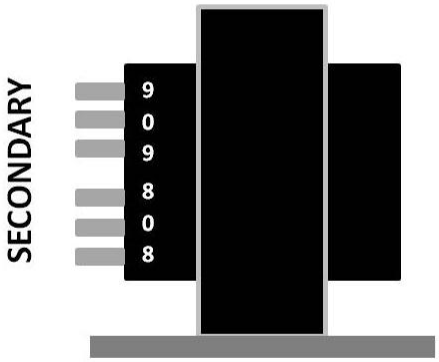

Mains Transformer
(reverse view)

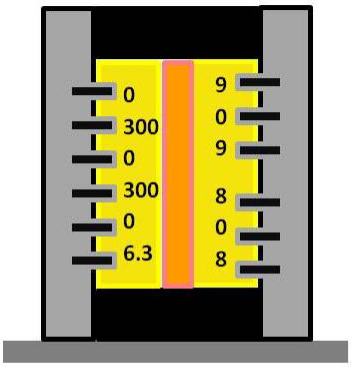

Mains Transformer
(Secondary view)

2.6.1 Attaching the Ground Lug

The Mains transformer has a Green wire coming out of it — this is a ground wire that attaches to the chassis ground screw on the chassis. We'll trim this wire to the proper length; then we'll strip the end of the wire and tin it.

- ☐ Trim the Green wire to 7", strip 1/2" from the end, tin it, and insert it into the Ground lug provided in the kit bag.

www.AudioNoteKits.com
audionotekits@rogers.com

- ☐ Solder the Ground lug in place. Do this by adding solder through the front of the lug, as shown above.

2.7 Configuring the Mains Primary Winding

Let's take a moment to talk about how the source AC power enters the DAC and how it is transformed into the various voltages needed throughout the unit. The basic theory of what's involved is as follows:

- The AC that comes out of the wall socket will enter the DAC through the IEC switch and the rocker switch into the Mains transformer.
- The Mains will take the input AC voltage (120V AC for North America and 240V for many other parts of the world) and convert it to the different AC voltages that will be used by the DAC circuits.
- The Mains transformer has two windings of 0–110–120. By using these windings in various parallel or series configurations, the DAC can be wired for 110V, 120V, 220V, 230V, and 240V operation to meet the requirements in countries throughout the world.

The Mains secondary includes the following:

300-0-0-300	used for HT voltage
8-0-8	used to feed the DC filaments for the 6922 tubes
9-0-9	shielded and used for the Digital Power Supply
0-6.3	used for the AC filament voltage for the tubes on the M2 Power Supply board

www.AudioNoteKits.com
audionotekits@rogers.com

We're now going to focus on the primary of the Mains transformer — this is where you see the 0–110–120 0–110–120 windings. This will allow us to configure the Mains for the correct wall voltage in your region.

During the lifetime of a product, we occasionally change some parts to upgrade performance and reliability. This can sometimes lead to some minor differences in the manual between the text, current graphics, and older pictures, particularly. If you find a picture that shows any gaps other than the gap between the two sets of three tabs on the secondary just ignore them. Gap or no gap, the tabs will always be in the same order from top to bottom.

The graphic below shows the correct wiring of the primary for 120V operation where the 0 of one winding connects to the 0 of the second winding and the 120 of one winding connects to the 120 of the second primary winding. If you live in a part of the world with a different Mains voltage, see Appendix A.1 for the correct primary wiring for where you live. This section of the manual shows the complete 120V setup procedure.

Mains Primary Wiring (120V)

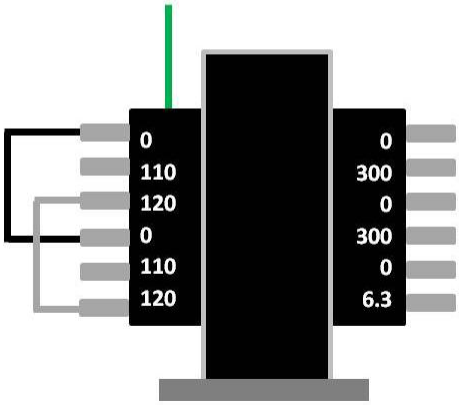

We're now going to set up the Mains for 120V operation by wiring the two windings in parallel. The first step is to add a wire from the 0 of one winding to the 0 of the other winding.

www.AudioNoteKits.com
audionotekits@rogers.com

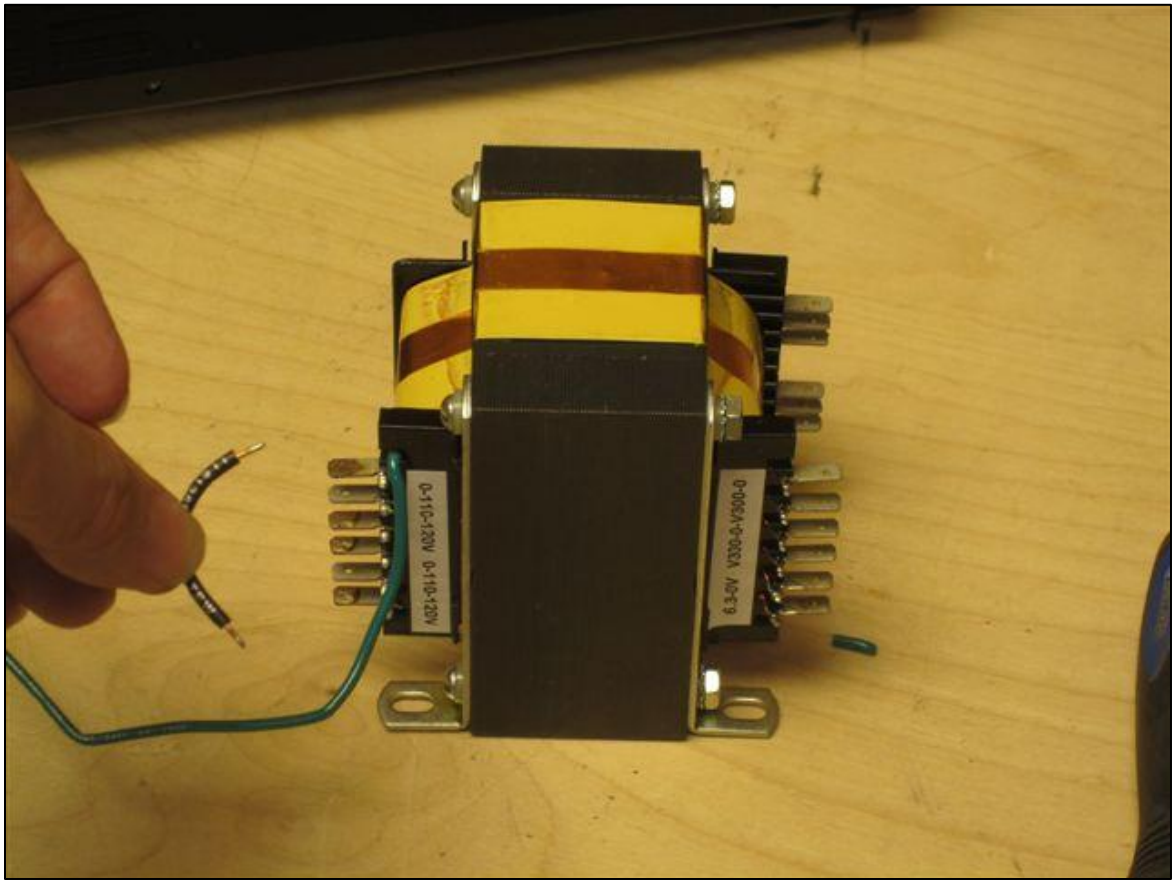

It's a really good idea to tin a Mains transformer lead before you connect a wire to it; this will make it easier to solder the wire to the lead. BUT, don't spend too much time soldering the Mains transformer, you could melt the bobbin: Don't exceed 5 seconds. If you don't connect in that time then stop, let it cool down, and try again later.

- ☐ Cut a piece (about 2 inches) of Black wire (as shown) that will bend comfortably between the two 0 tabs.
- ☐ Strip the ends and lightly tin. (This can be difficult on a short piece of wire so take your time.) Tin the 0 lead at the top of the Primary and then position the wire on the lead and add heat — the tinned effect of the two surfaces will melt them together.

www.AudioNoteKits.com
audionotekits@rogers.com

Examine the picture below before attempting the next steps.

- ☐ Connect the wire to the fourth tab down so that the 0 and 0 are connected.
- ☐ Similarly prepare another Black wire and connect the 120 and 120 tabs (the third and sixth tabs from the top).

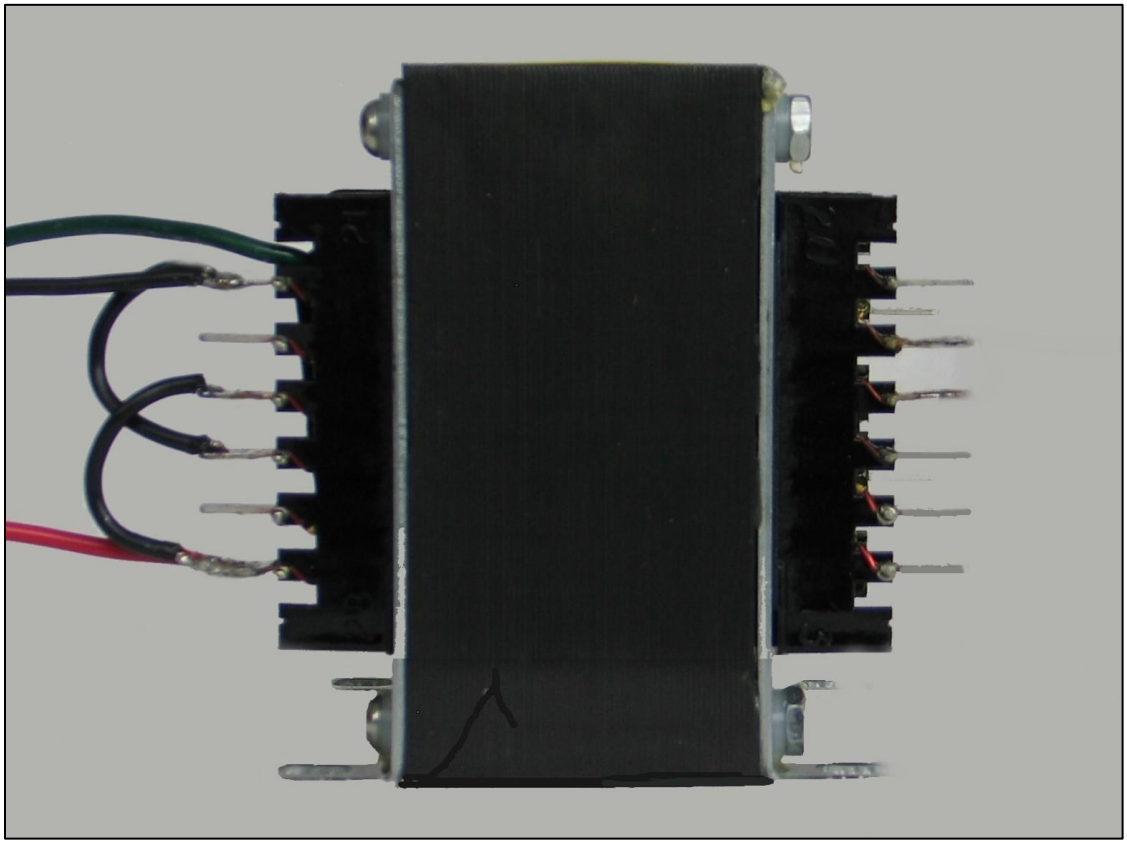

Now we'll add two more prepared wires to the Mains transformer primary.

- ☐ Take the Black prepared wire with the crimp on the end, tin the unprepared end, and solder it to the top 0 tag.
- ☐ Similarly, take the Red prepared wire with the crimp on the end, tin the unprepared end, and solder it to the bottom 120 tag.

To recap: the Black wire is connected to the top 0 connection and the Red wire is connected to the bottom 120 connection.

www.AudioNoteKits.com
audionotekits@rogers.com

2.8 Initial Mains Secondary Wiring

- ☐ Have a look at the diagram below. Use a short length of Black wire to make a connection between the second and third from the top taps (300–0): at the same time add a 12" piece of Black wire to the second tap (300) as shown. Later we'll solder this wire to the M2 Power Supply board.

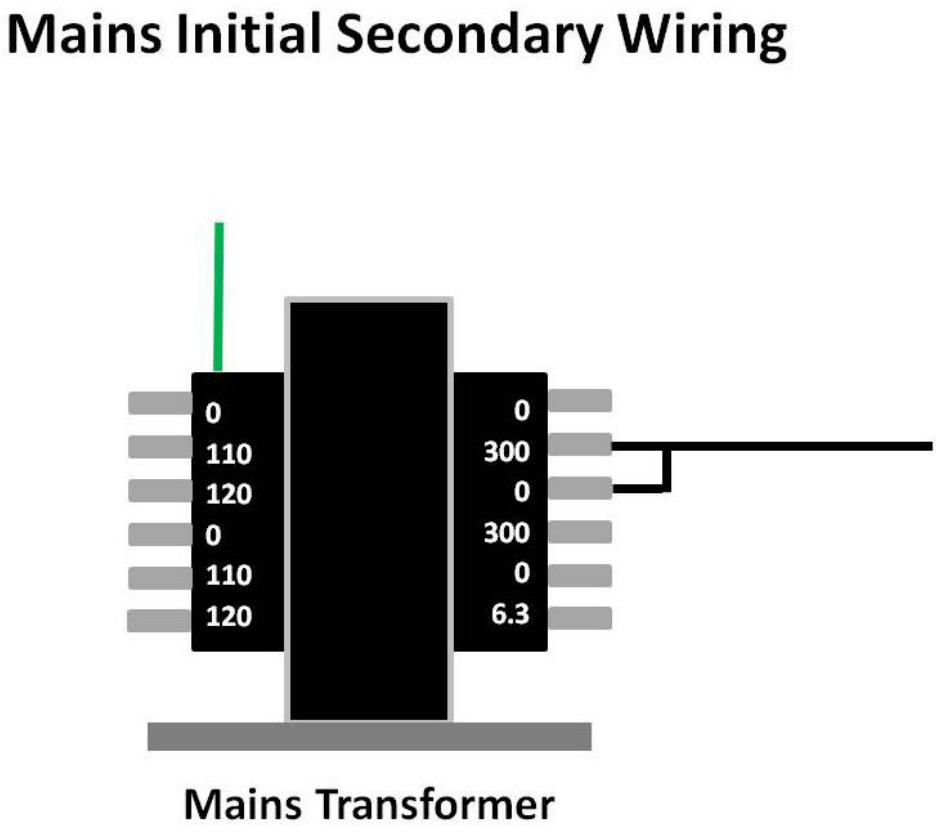

www.AudioNoteKits.com
audionotekits@rogers.com

2.9 Installing the Mains Transformer and AC Connections

With the wiring above now completed we can now position the Mains transformer into the chassis... *but do not secure it as we have more work to do around the IEC section.*

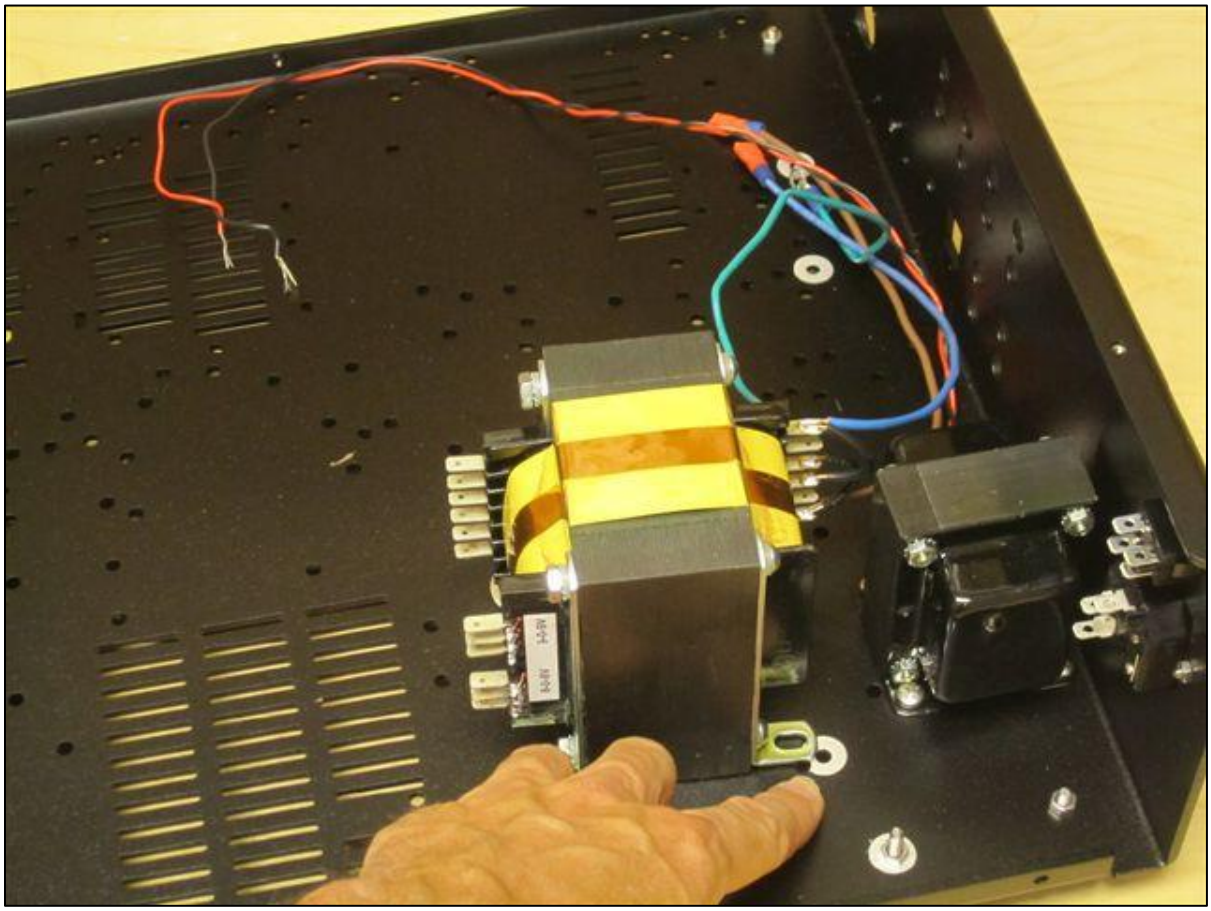

www.AudioNoteKits.com
audionotekits@rogers.com

In this section, refer to the diagram below for the AC Power On/Off and Ground Connections for 120V.

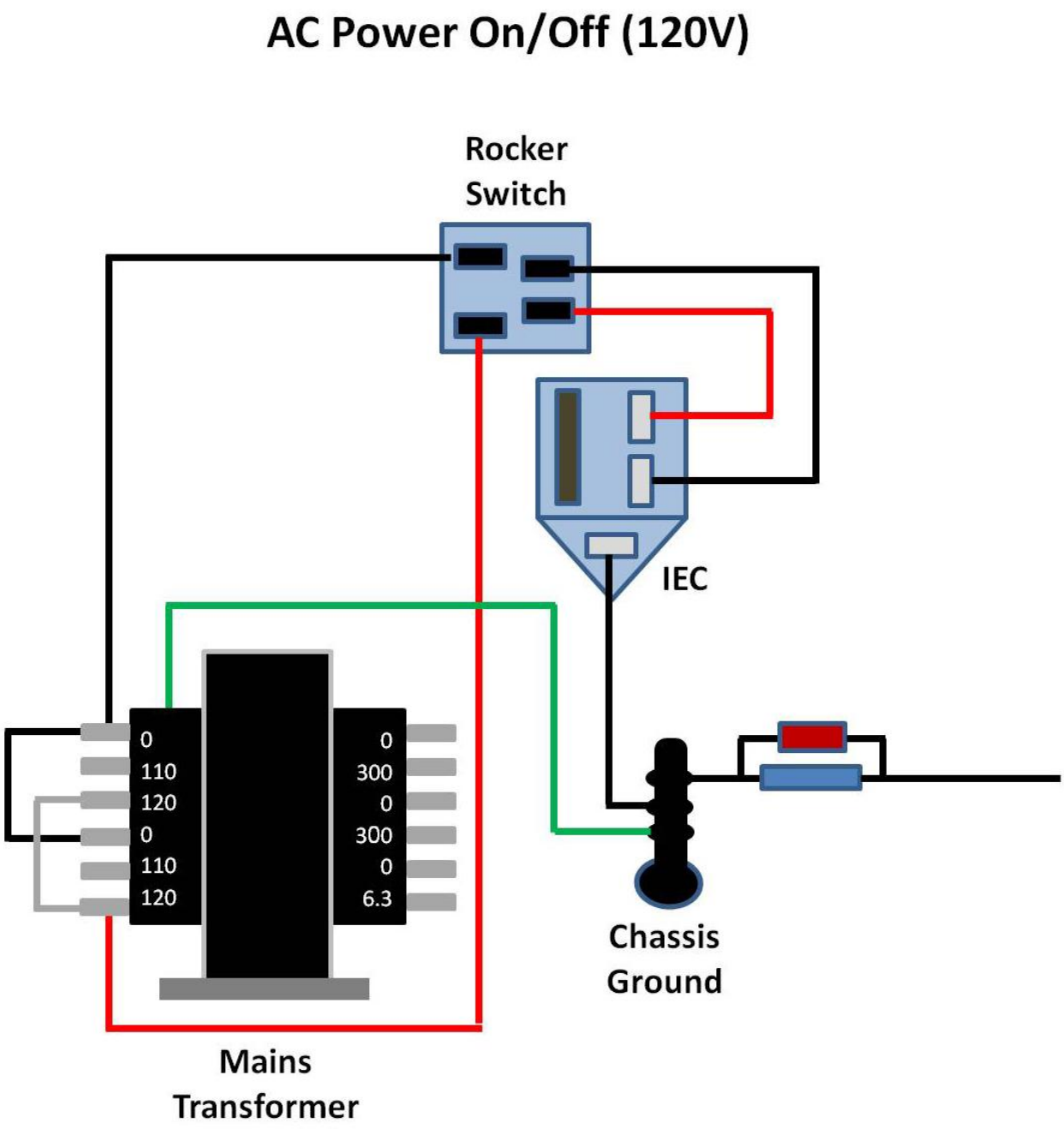

www.AudioNoteKits.com
audionotekits@rogers.com

➡ *After completing the following steps, return here to review the connections.*

We are now going to attach 3 wires to the chassis Ground, as in the picture below. As you go, place each wire's Ground lug onto the protruding screw; when all 3 are in position, secure them to the chassis Ground with an M4 nut.

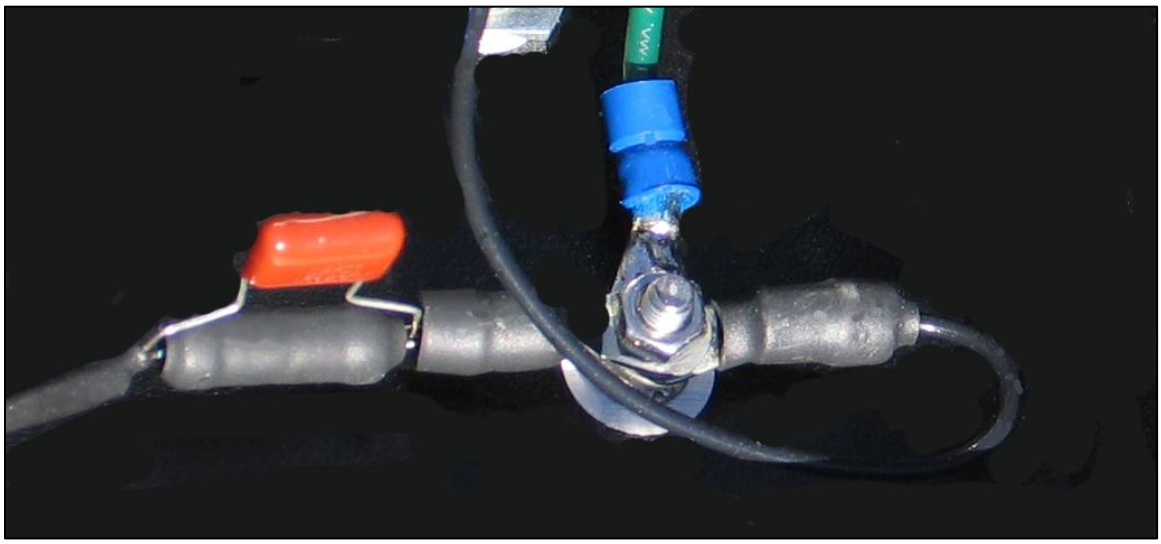

- ☐ Take the prepared Black cable with the Ground lug on one end and the square crimp on the other and install it on the chassis Ground screw.
- ☐ Take the Green wire coming from the Mains with the Ground lug on the end that you prepared earlier and install it on the chassis Ground screw.
- ☐ Take the prepared wire from the IEC bag with the 10R resistor and capacitor in parallel and install it on the chassis Ground screw.

There should now be 1 Green and 2 Black wires attached and secured to the chassis Ground.

➡ *In some graphics you may see the IEC plug shown upside down. While it can go in either way we have chosen to have it installed in the chassis with the GND lug at the bottom — this will match the orientation in the graphics. But you can do it either way as long as the connections are the same.*

- ☐ Now take the Black wire attached to the chassis Ground screw with the unattached square crimp and connect it to the GND connection on the IEC socket as shown.
- ☐ Take the prepared Black and Red wires with the 4 crimps on the ends (2 on each end). Carefully examine the IEC graphic on the previous page, then attach the prepared Black and Red wires to the IEC socket as shown.

www.AudioNoteKits.com
audionotekits@rogers.com

Before you complete the next step, have a close look at the crimps on the unattached ends: *you'll notice there is a flat edge and a slightly rounded edge*. Attach the crimps such that the flat edges face each other so they are the maximum distance apart.

- ☐ Complete the connection of the other end of the Black and Red prepared cable to the more narrowly spaced tabs of the rocker switch — closest to the corner of the chassis, as shown in the graphic.
- ☐ Now take the Black and Red wires with crimps that are attached to the Mains transformer and connect them to the more widely spaced tabs on the rocker switch — towards the Mains, as shown in the graphic.

Here's a picture of the completed rocker switch and IEC wiring:

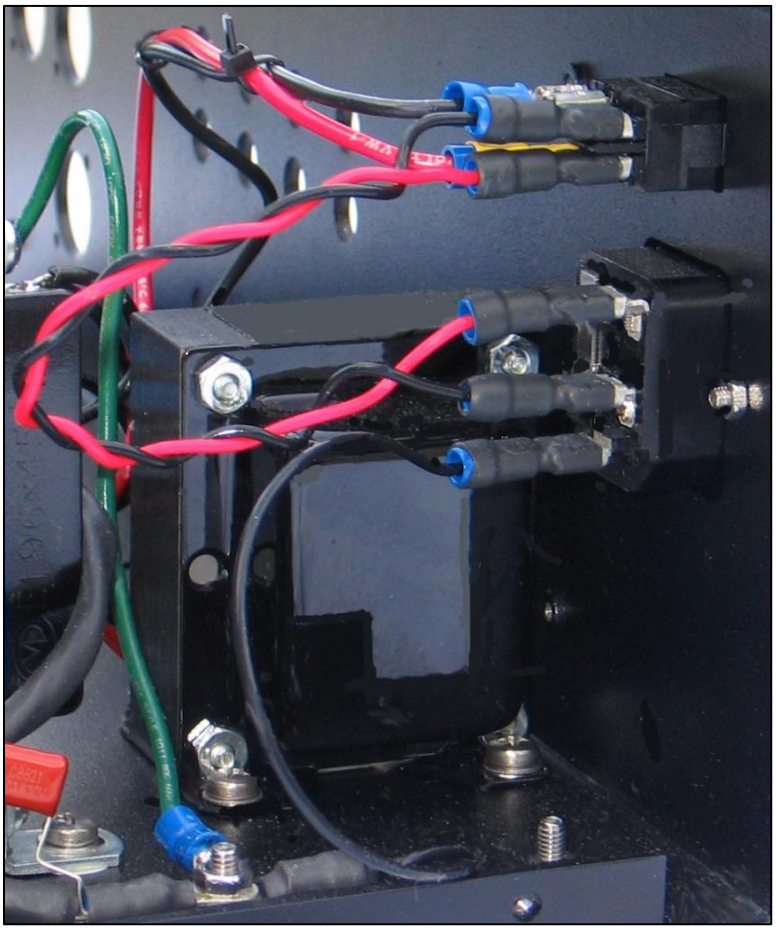

Now that we've completed this wiring, *check it carefully*. Go back and go over each step again. Take your time.

www.AudioNoteKits.com
audionotekits@rogers.com

Now that you've checked your work, you can secure the Mains transformer into position with M4 screws, nuts, and serrated washers. Position the serrated washers closest to the M4 nut, on the underside of the chassis.

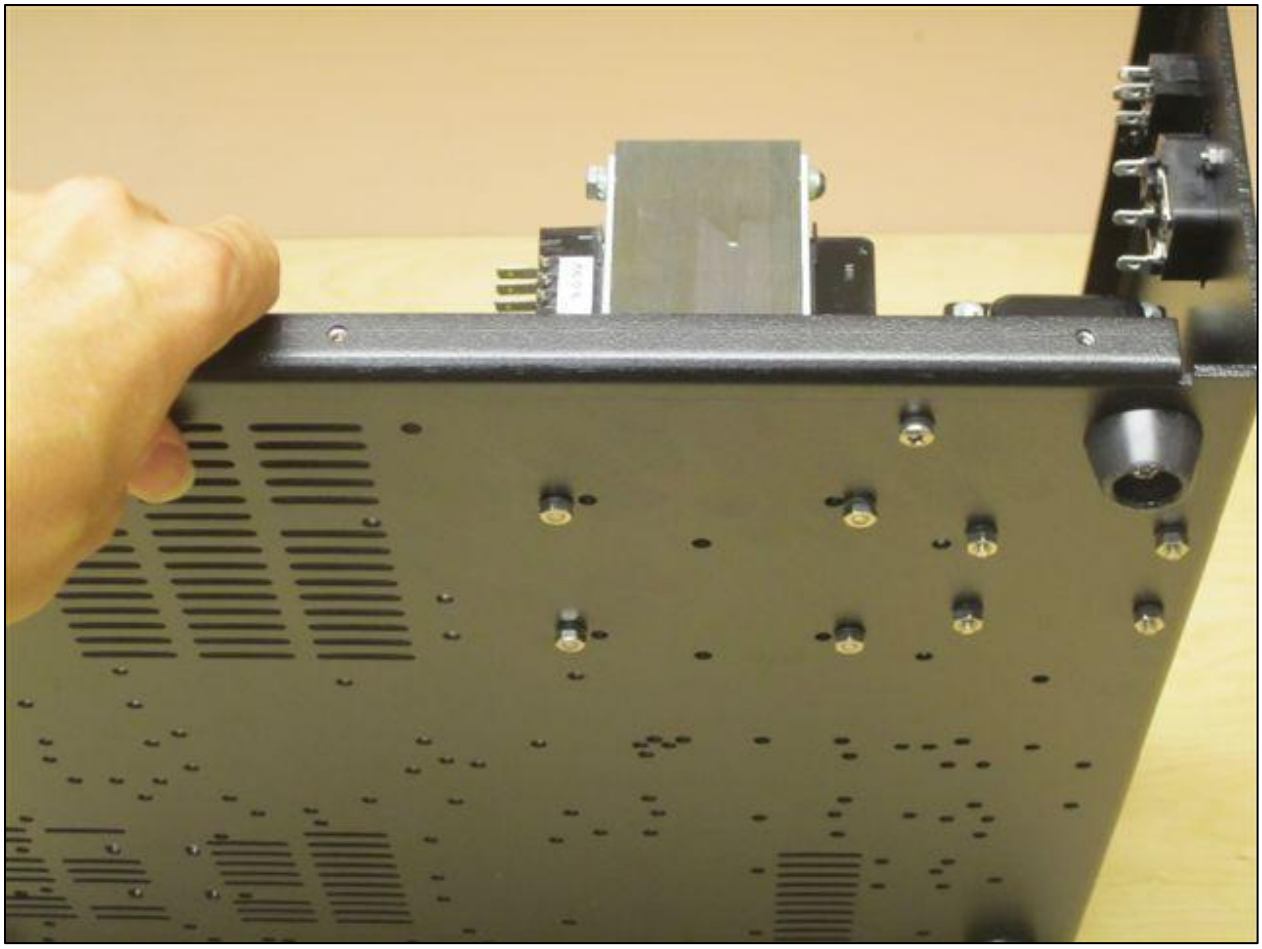

Here's a view underneath the chassis, showing the screws in position...

www.AudioNoteKits.com
audionotekits@rogers.com

...and here's a view from the top:

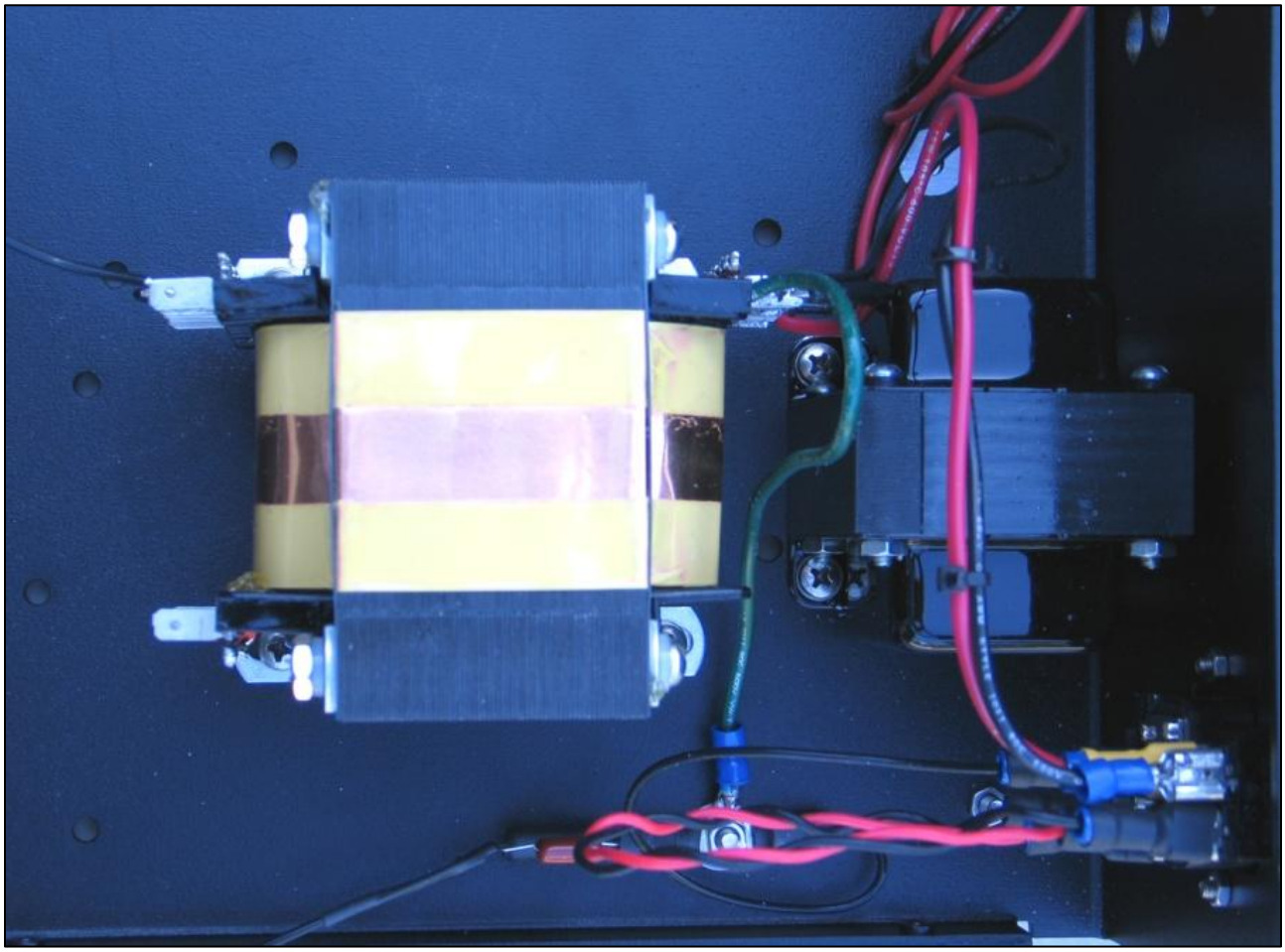

Congratulations on the Choke and Mains installation! Now we'll move onto the M2 Power Supply board. But first,

Time for another break.

www.AudioNoteKits.com
audionotekits@rogers.com

Section 3

M2 Power Supply Board

3.1 Overview

In this section we'll be building the M2 Power Supply board. The parts (the PCB, resistors, capacitors, etc.) are in the M2 Power Supply bag.

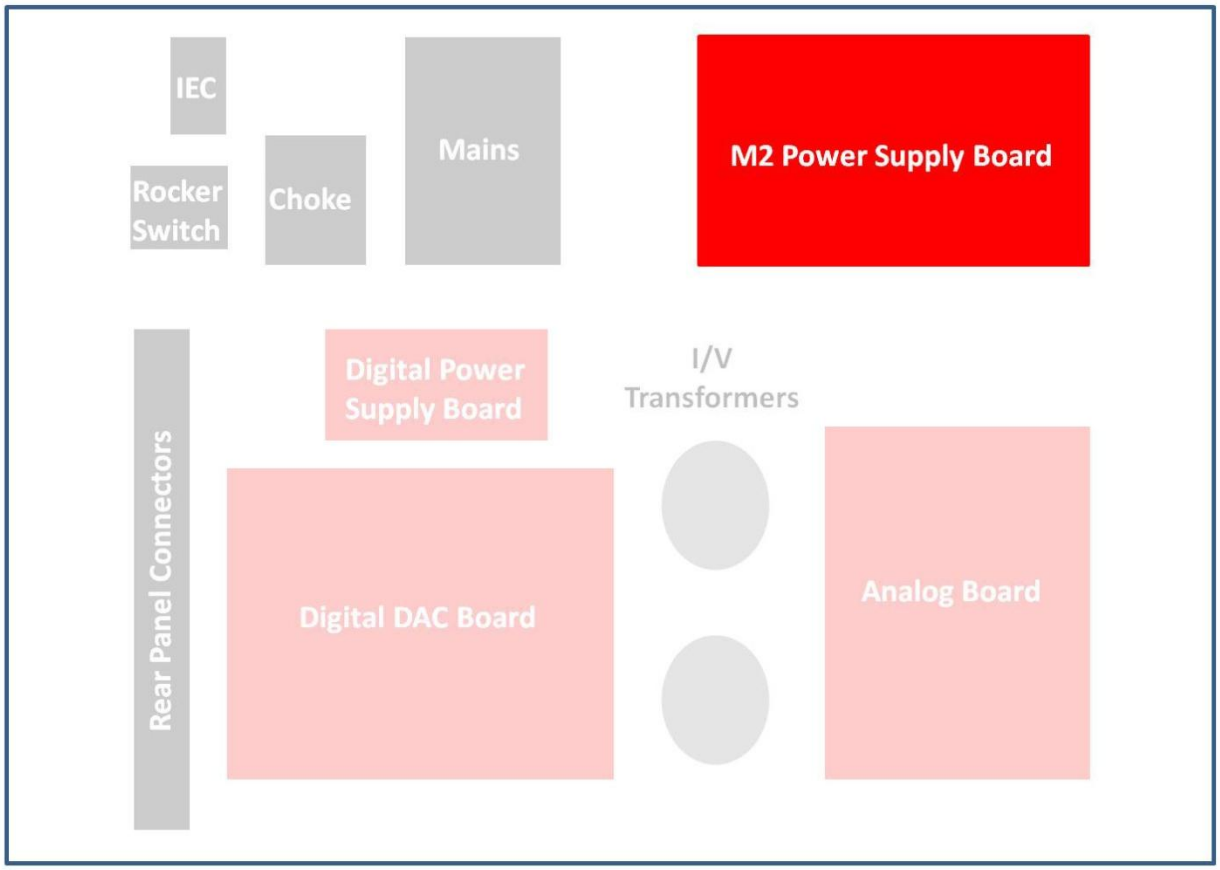

Once this section is built we'll run tests for both ohms and voltages to make sure your power supply is working perfectly. If there are any problems, we'll try and diagnose what's wrong. If that doesn't help, please contact us by phone or email (audionotekits@rogers.com) and we will help you resolve the issue.

Here is a view of the completed M2 Power Supply.

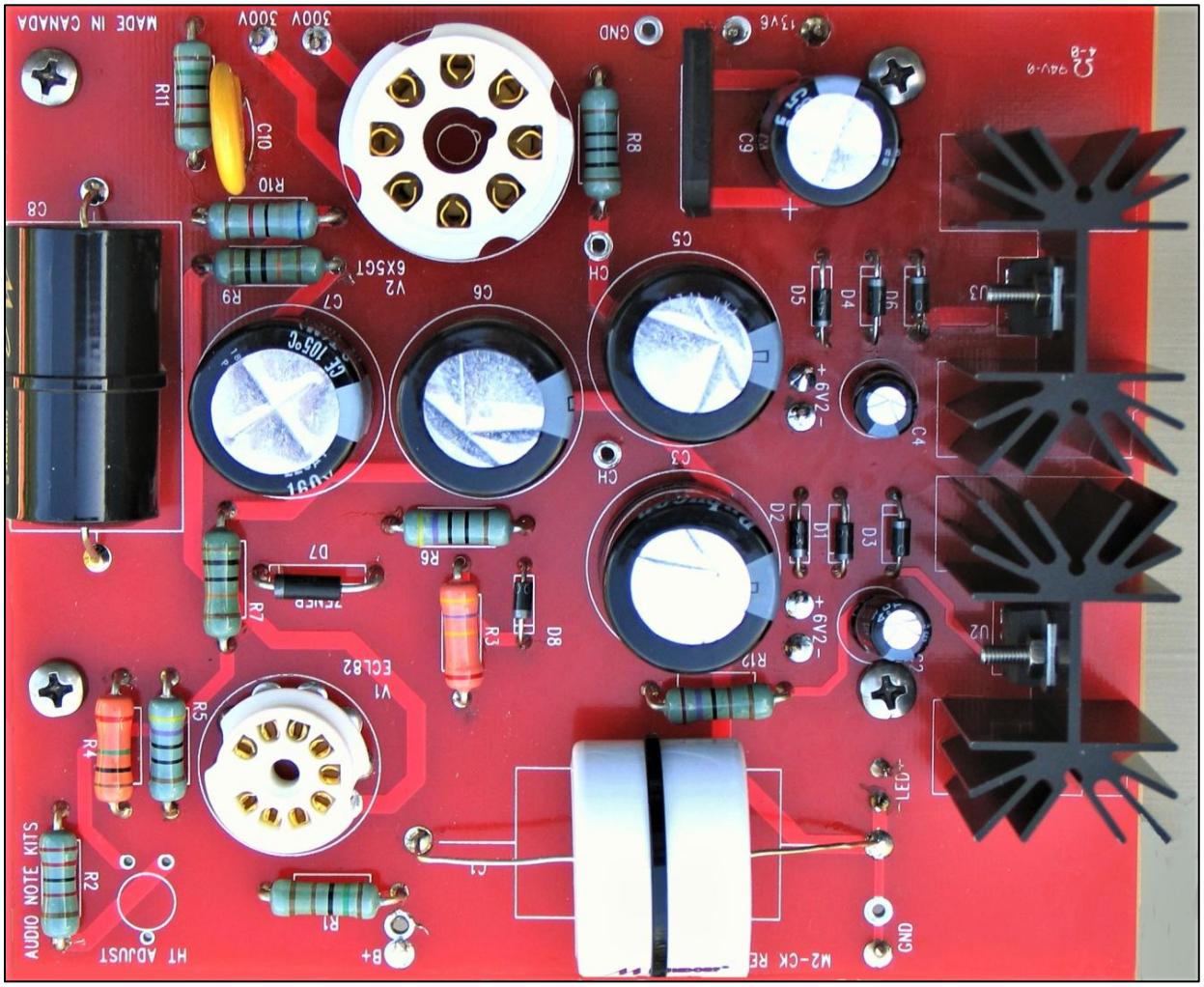

We'll construct the M2 Power Supply board first and then fit it into the chassis. The steps we'll follow are:

- Install the Valve Bases
- Install the Resistors
- Install the 6V2 Wires
- Install the Capacitors
- Install the Bridge Rectifier
- Install the Zener Diode
- The Filament Section
- Additional Wiring

www.AudioNoteKits.com
audionotekits@rogers.com

Let's begin by examining the schematic[2] and a completed board.

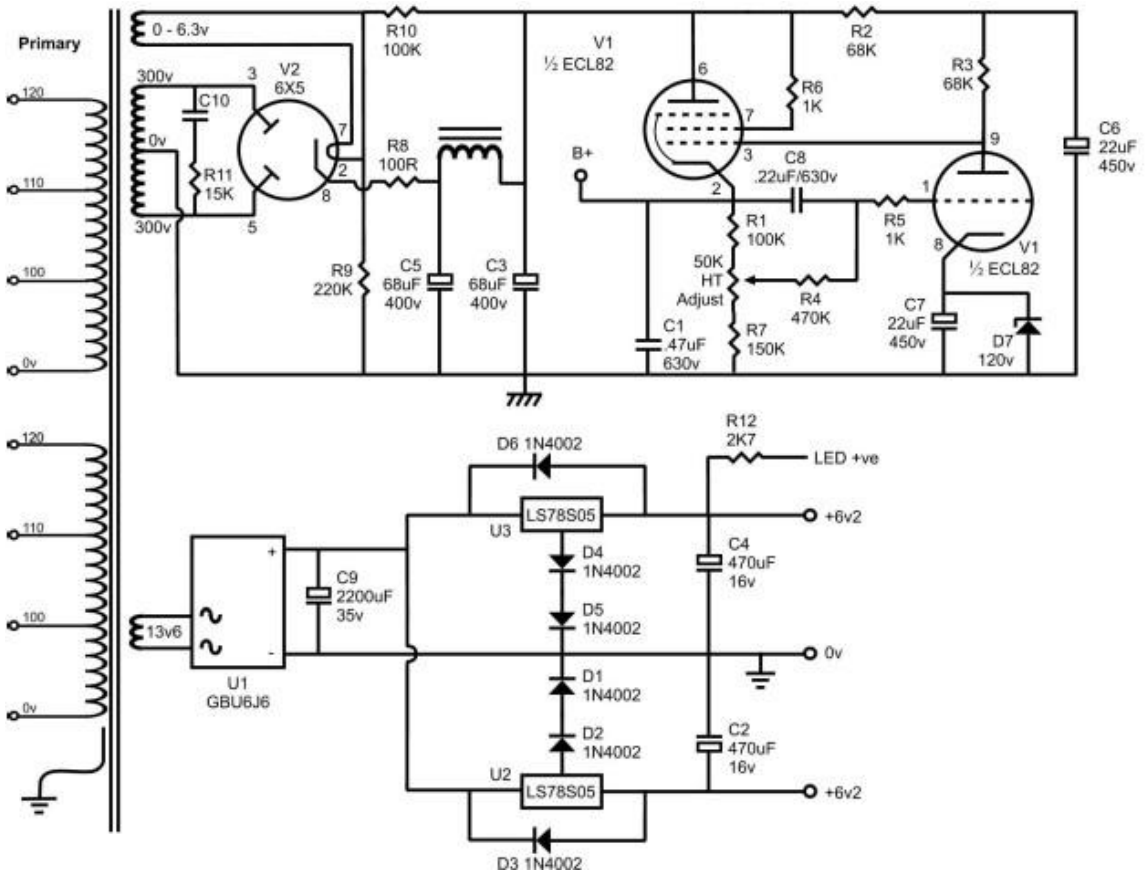

3.2 Installing the Valve Bases

Let's start by installing the valve bases. There are two valve bases in the tube rectified and regulated Power Supply.

Valve Bases

QTY	Designation	Description
1	9-pin Valve Base	V1
1	8-pin Valve Base	V2

[2] Schematics may change from time to time, but we've included this schematic as a guide. If you find any differences between this schematic and your board and parts — and it concerns you, just give us a call.

www.AudioNoteKits.com
audionotekits@rogers.com

Use some masking tape to secure the valve base to the board prior to soldering. *The key is to make sure the valve base is level*: if your base is soldered on an angle then your tube will lean over! You'll want to solder from the underside of the board. We suggest that you use just a little solder to secure each pin to the board: perhaps just start with two pins which are opposite to each other to make sure the base stays level — then you can add more solder to the pins. In the end you can fill up the entire valve base hole.

➡ *Be very careful not to let any solder bridge to the next pin as this will cause a short and your Power Supply will need some serious debugging or resuscitation!*

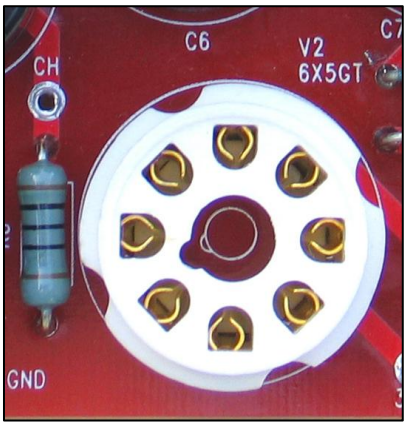

☐ Insert the 8-pin valve base into the board at position V2.

➡ *The key in the valve base lines up with the stencil on the board — they both have little notches.*

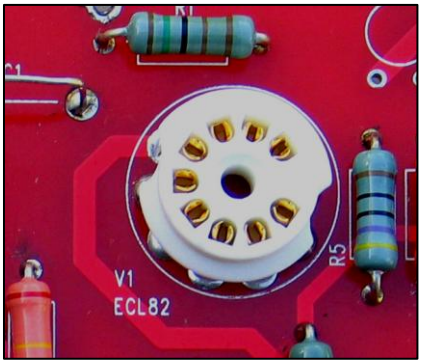

☐ Once completed, you can insert the 9-pin valve base at V1; it only goes one way. Again, use some masking tape to secure it so that it's level and then solder it into position. Well done!

www.AudioNoteKits.com
audionotekits@rogers.com

3.3 Installing the Resistors

Let's take a look at the parts list for the resistors:

Resistors

Quantity	Value	Designation
1	100R	R8
2	470R	R5, R6
1	2K7	R12
1	15K	R11
1	22K	R2
1	470K	R3
1	68K	R10
1	150K	R1
2	100K	R7, R9
1	1M	R4

Note: The part marked 'HT ADJUST' on the board is no longer used; it has been replaced by a fixed resistor.

A quick lesson about resistors:

- A resistor that reads 100R means that it is 100 ohms; the 'R' stands for resistance
- A resistor that reads 2K7 means it is 2700 ohms ; the 'R' is assumed and the K (which stands for Kilo or 1000) is positioned like the decimal place, so it's like reading 2.7K ohms (K = multiplied by 1000) — but it's shortened to 2K7
- Another example like this is the 1M resistor, which is 1 Mega ohms

Use an ohmmeter to measure each resistor to verify its correct value. There's a resistor calculator chart on the audionotekits.com website and we've included a chart in Appendix A.1.

It's a good idea to orient your resistors so that the color codes can be read from left to right; it makes it easier to spot any issues.

www.AudioNoteKits.com
audionotekits@rogers.com

It's also a good idea to not have the resistors installed right against the board, for a couple of reasons: 1) it's better for heat disposition, and 2) in some cases there are circuit traces running under the resistors and we really don't want resistors touching them. So, as shown below (on a board from a different kit), we use a narrow piece of cardboard cut to size as a 2–3 mm spacer: this will still let you solder while ensuring that the resistor is not pressing against the board.

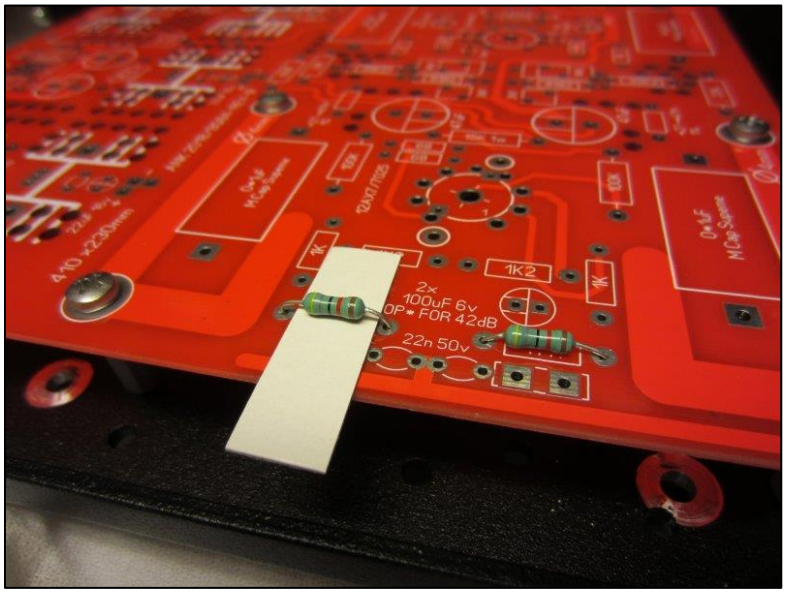

Also, be sure to solder on the underside of the board and check that you have nice little "volcanoes" on each solder joint. And, when you go to clip a lead be sure to clip above the volcano so that you don't slice off this nice joint.

- ☐ Populate the Power Supply board with the resistors, first checking the value and then installing them into the correct designation (R1, R2, etc. as shown on the board). Then bend the legs *slightly* once they are in the board to secure them; this way they won't fall out and you can check your work again prior to soldering. Once all the resistors are in and you feel confident then you can start soldering from the underside of the board.

Once the resistors are soldered into position clip the leads.

Hold the lead that you are about to clip with one hand so that it does not go flying off and hit you in the face or eye! Another great tip: Orient your resistors so that the color codes can be more easily read from left to right with consistency.

www.AudioNoteKits.com
audionotekits@rogers.com

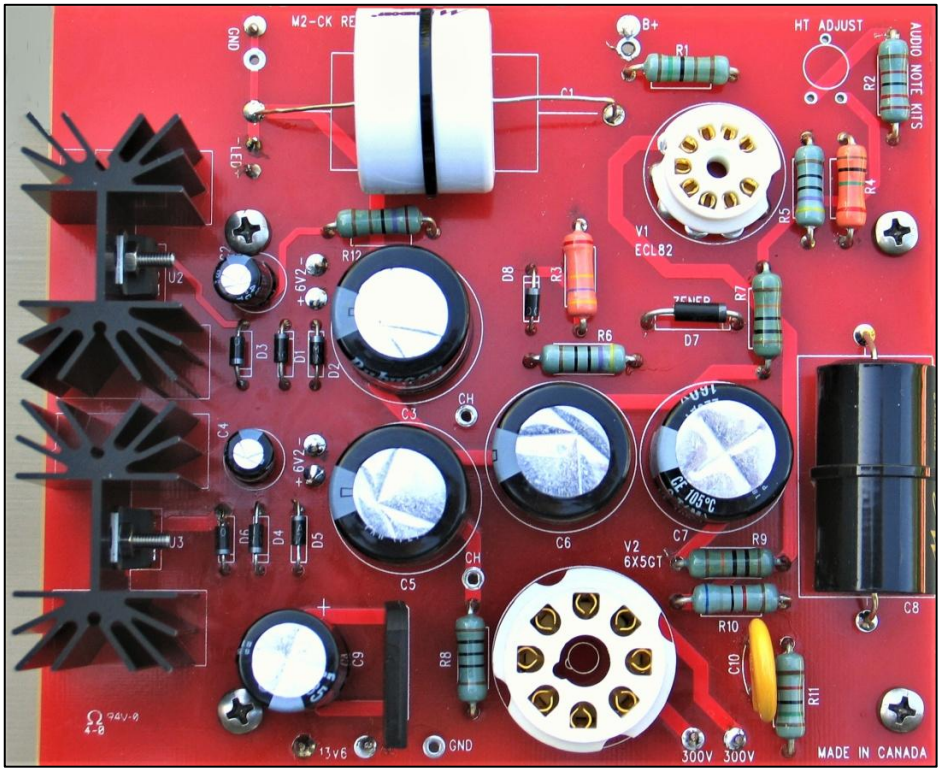

Resistors in Place

www.AudioNoteKits.com
audionotekits@rogers.com

3.4 Installing the 6V2 Wires

Before we install the capacitors, let's add the Red and Black 6V2 twisted wires on the bottom of the board. These wires will be found in Wire Bag #2. These PTFE wires are 22 gauge silver plated copper. We've provided you with a long length of about 80 cm or almost a complete meter.

Have a good look at the pictures below; these show the top and bottom of the board and the wiring that we'll install in this and subsequent steps:

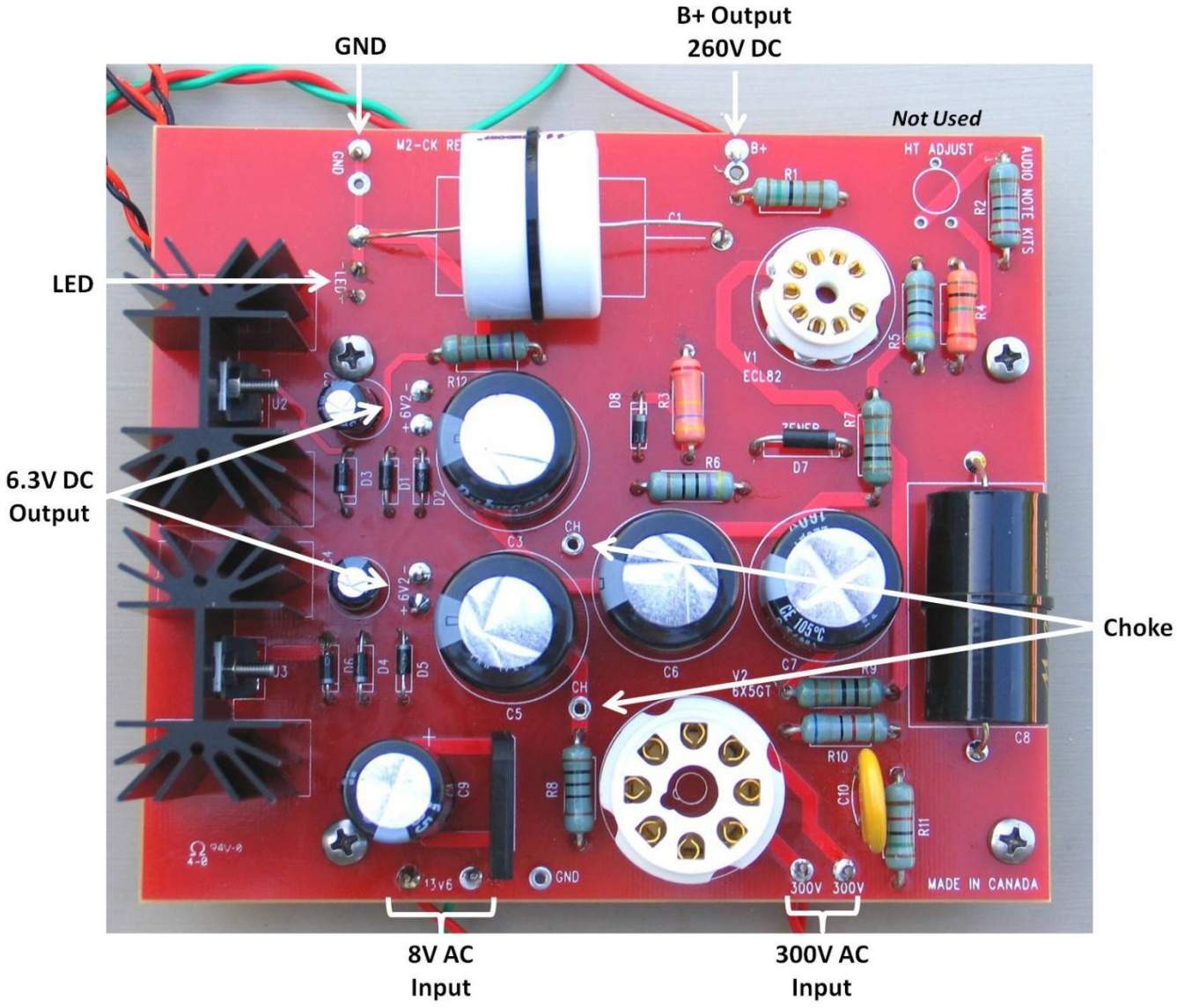

www.AudioNoteKits.com
audionotekits@rogers.com

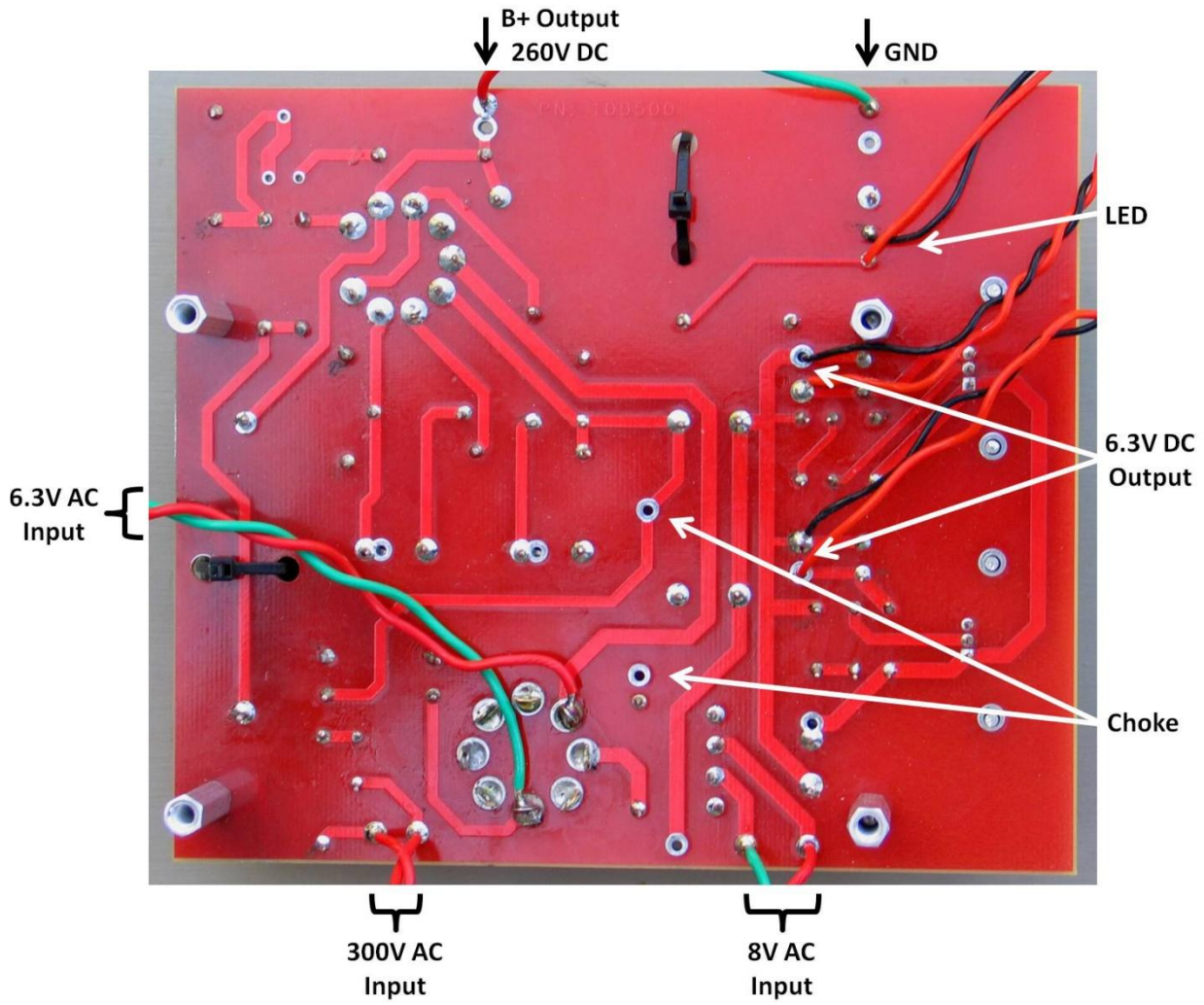

The solder pads on the M2 board, through which you'll be inserting wires, are quite small, so, when you tin a wire, don't use too much solder. Then, if there's a small solder 'nub' at the end of the wire, you can just cut off about 1 mm and it should fit nicely through the hole.

- ☐ Cut the long twisted Red and Black wires in half, strip off the ends, twist them tight, tin them, and then place them from underneath the board into the +6V2– holes found on the board besides C3 and C5. Place the Red wire in the + hole and the Black wire in the – hole. Solder from the top side of the board and then trim.

www.AudioNoteKits.com
audionotekits@rogers.com

3.5 Installing the Capacitors

Next we'll install the capacitors. We'll start with the electrolytic capacitors:

Electrolytic Capacitors

Quantity	Value	Designation
1	2200uf 35V	C9
1	220uf 160V	C7
3	100uf 450V	C3, C5, C6

There are several different types of capacitors that will be installed in the M2 Power Supply. The first type are called electrolytic capacitors: these are the capacitors like, for example, the 100uf 450V capacitor, which has a stripe down one side. You'll remember from the Introduction to the manual that the stripe denotes the NEGATIVE side. On the board you'll see a + sign which denotes the POSITIVE side. Be sure to align the capacitors correctly into position.

Here's what we want to achieve:

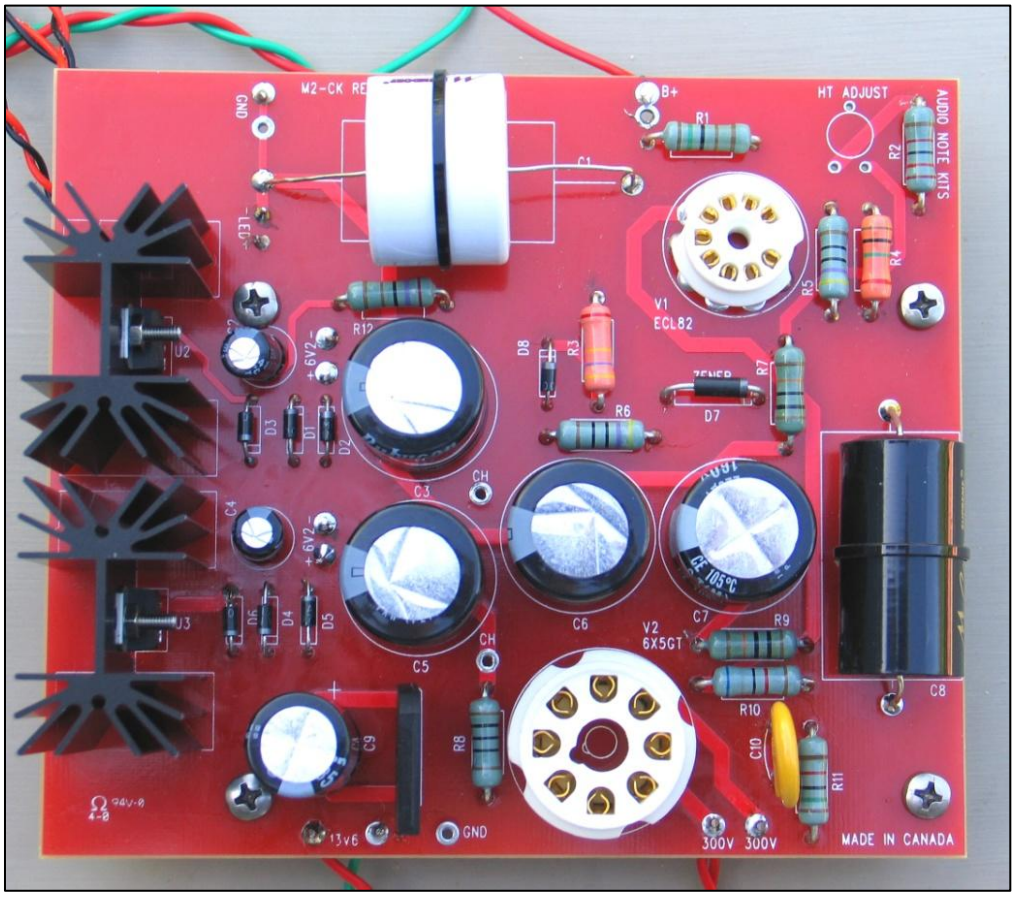

Looking at the picture above you will see the 7 cylindrical electrolytic capacitors standing straight up: we'll install 5 of these now (C3, C5, C6, C7, C9) and 2 (C2 and C4) later.

www.AudioNoteKits.com
audionotekits@rogers.com

☐ Install C3, C5, C6, C7, C9 so that they look like the ones in the picture, again being so careful to orient them correctly.

Disk Capacitor

Quantity	Value	Designation
1	Disc 4700pf 3KV	C10

☐ Install the disk capacitor (C10). Its orientation does not matter.

3.6 Installing the Bridge Rectifier

Bridge Rectifier

Quantity	Value	Designation
1	GBU6J6A	U1

The Bridge Rectifier accepts AC voltage and generates a DC voltage which will be used to create the DC filament voltages used by the line stage on the Analog board. You'll see a notch on the Bridge Rectifier (part number: GBU6J6A) on the right side in the picture below. Match the notch with the stencil on the board, which has a notch on the rectangle. The notch points towards the middle of the board.

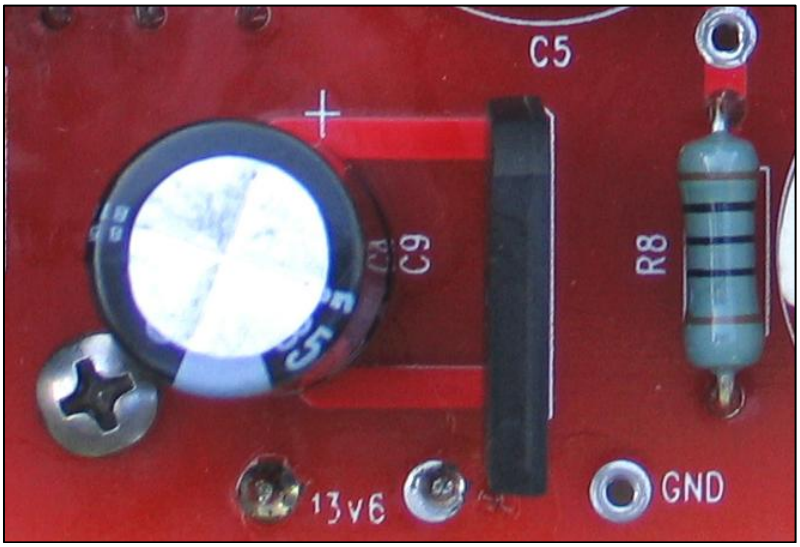

☐ Install the Bridge Rectifier into position in U1.

www.AudioNoteKits.com
audionotekits@rogers.com

3.7 Installing the Zener Diode

Zener Diode and Regular Diodes

Quantity	Value	Designation
1	3.25W 100V Zener (IN5378B)	D7
1	IN4007	D8

The Zener Diode is in its own bag so as not to confuse it with the 1N4007 diodes also used in the kit (the 1N4007 diodes are typically a little smaller). Be sure to notice the stripe on the Zener Diode and match it with the board stencil.

- ☐ Install the Zener Diode in location D7.

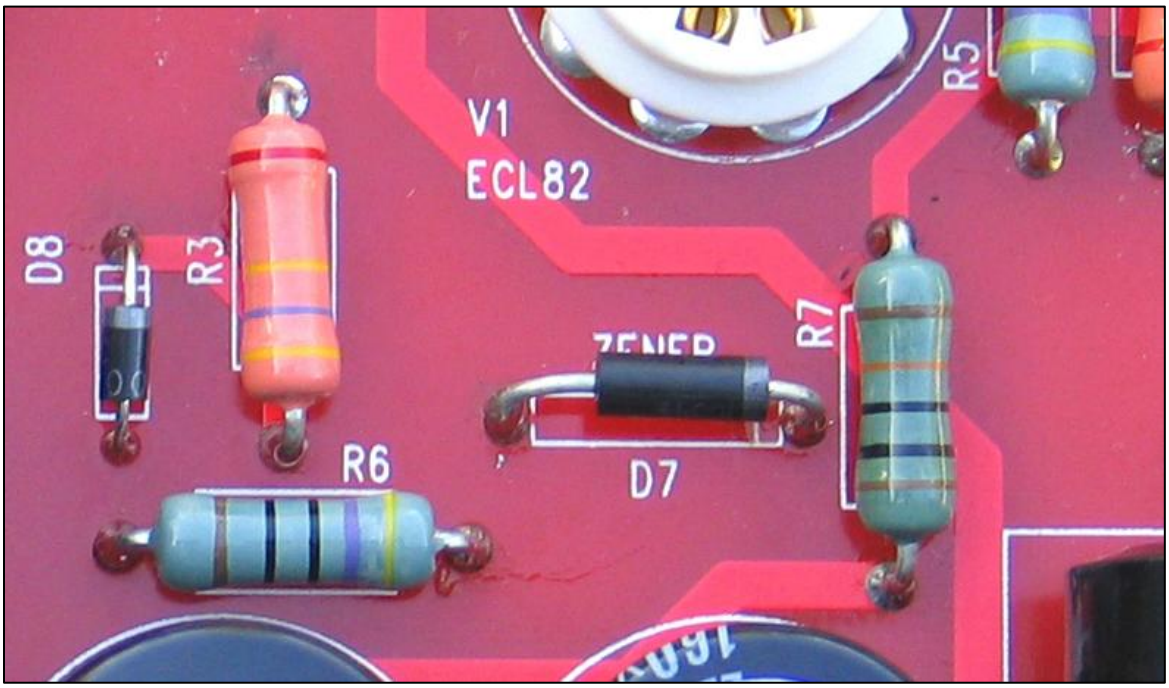

Also in this picture, on the left side in the middle, you can see the stencil for D8 which is for one of the 1N4007 regular diodes.

- ☐ Let's take this opportunity — while we're in the neighbourhood — to install one of the 1N4007 regular diodes in D8: again, be sure to align the silver stripe on the diode with the bar on the stencil on the board. You can also use the small piece of cardboard (narrowed a bit) to maintain 2–3 mm clearance above the board, as you did above with the resistors.

www.AudioNoteKits.com
audionotekits@rogers.com

3.8 Filament Section

Now we're going to look at the Filament section. We recommend that you read over this entire section before starting.

Let's begin by understanding what we want to accomplish in this section and by sharing a little background on how and why some key components 'fit in.' The Filament section of the M2 Power Supply is, in fact, two distinct sections that generate a voltage on the +6V2– points on the board:

- U3 filament section: U3 heatsink and regulator, diodes D4, D5, D6, and capacitor C4
- U2 filament section: U2 heatsink and regulator, diodes D1, D2, D3, and capacitor C2

The M2 Power Supply is used in a number of ANK Audio Kits and can be configured to meet their different needs by putting different components in locations that, in effect, program the U3 filament section or the U2 filament section to output either a 6.3V filament or a 12V filament voltage. In the DAC 2.1 Signature, the 6922 tubes on the Analog board need 6.3V for the filament and we'll configure the U2 and U3 sections to meet that need using the 78S05 regulator and 6 1N4007 diodes.

Diodes

Quantity	Value	Designation
6	IN4007	D1, D2, D3, D4, D5, D6

☐ Install the remaining 6 1N4007 diodes in positions D1, D2, D3, D4, D5, and D6.

➡ *Note that the diodes need to be oriented with the silver line on the diode matching the stripe on the silkscreen of the board. Look carefully: they are **not** all oriented in the same direction. Also, take care to position the Red and Black 6V2 twisted wires out of the way as you work so that your soldering iron will not burn the wires accidentally.*

Electrolytic Capacitors

Quantity	Value	Designation
2	470uf 16V	C2, C4

☐ Now install the last of the electrolytic capacitors in the C2 and C4 positions, again making sure to orient them correctly. Note the '+' (POSITIVE) on the board and the stripe on the NEGATIVE side.

www.AudioNoteKits.com
audionotekits@rogers.com

Before we go on, let's have another close look at the capacitor installation:

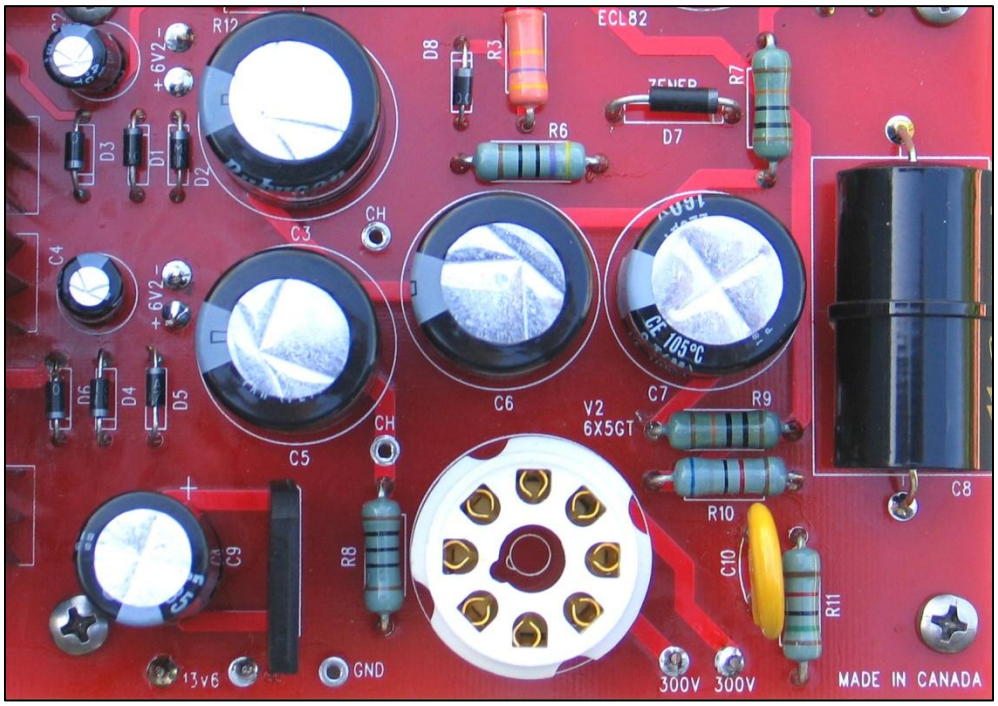

3.8.1 Installing the Regulators and Heatsinks

Regulators

Quantity	Value	Designation
2	L78S05	U2, U3

Have a look at the picture below: Notice that the Black heatsinks have the regulator installed in them. The DAC 2.1 Signature 5V regulator is part number L78S05. (I know, it's really hard to read!)

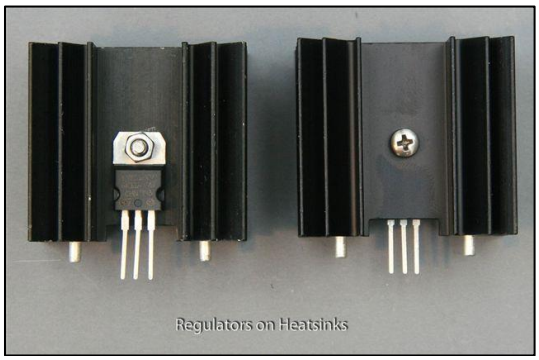

The picture shows one regulator, from the front and back.

www.AudioNoteKits.com
audionotekits@rogers.com

- ☐ Take an M3 PAN head screw and connect the regulator as shown in the picture. The heatsink is the same front and back but be sure to position the regulator pins and the heatsink pins in the same direction. You'll also want to be sure that the regulator is straight: a good way to do this is do the final tightening of the screw while holding the regular and heatsink in position on the board where it will go.
- ☐ Insert the regulator and heatsink into the board as shown in the picture below and solder the 3-pin regulator from underneath the board. Let's leave the heatsink itself (the 2 pillars) unsoldered for the moment.

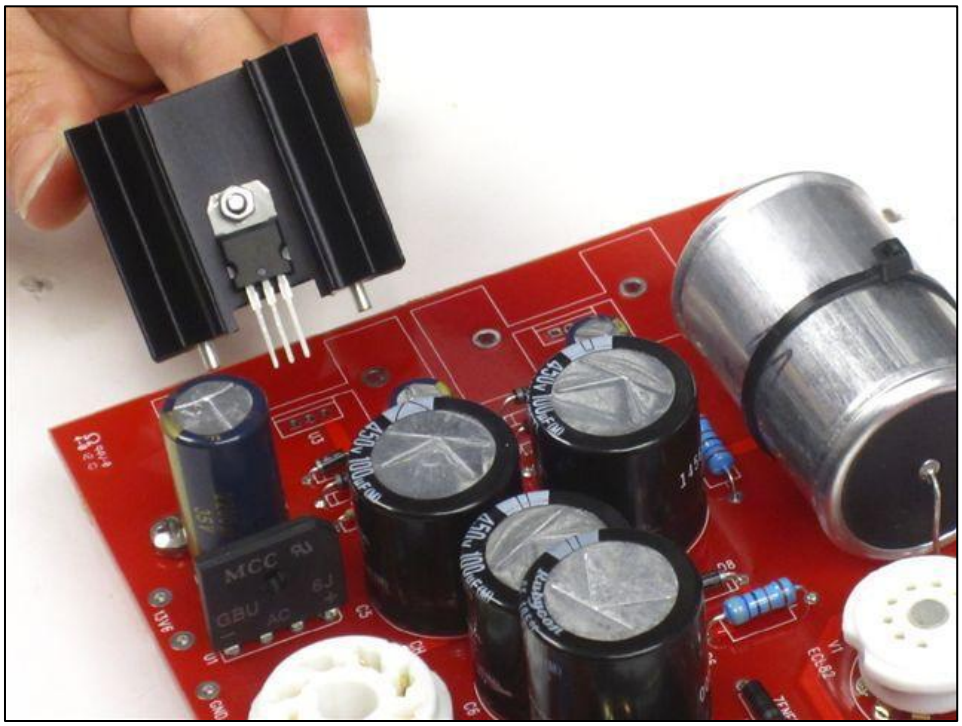

- ☐ Repeat the 2 previous steps with the other regulator and heatsink.

3.8.2 Installing the Remaining Capacitors

Capacitor

Quantity	Value	Designation
1	.22uf 600V (or greater)	C8
1	2.7uf 450V EVO Oil	C1

Here you can see the installation of the Mundorf .22uf film capacitor and the large MCap 2.7uf EVO Oil capacitor. Film capacitors do not have a specific orientation: they can be installed in either direction.

www.AudioNoteKits.com
audionotekits@rogers.com

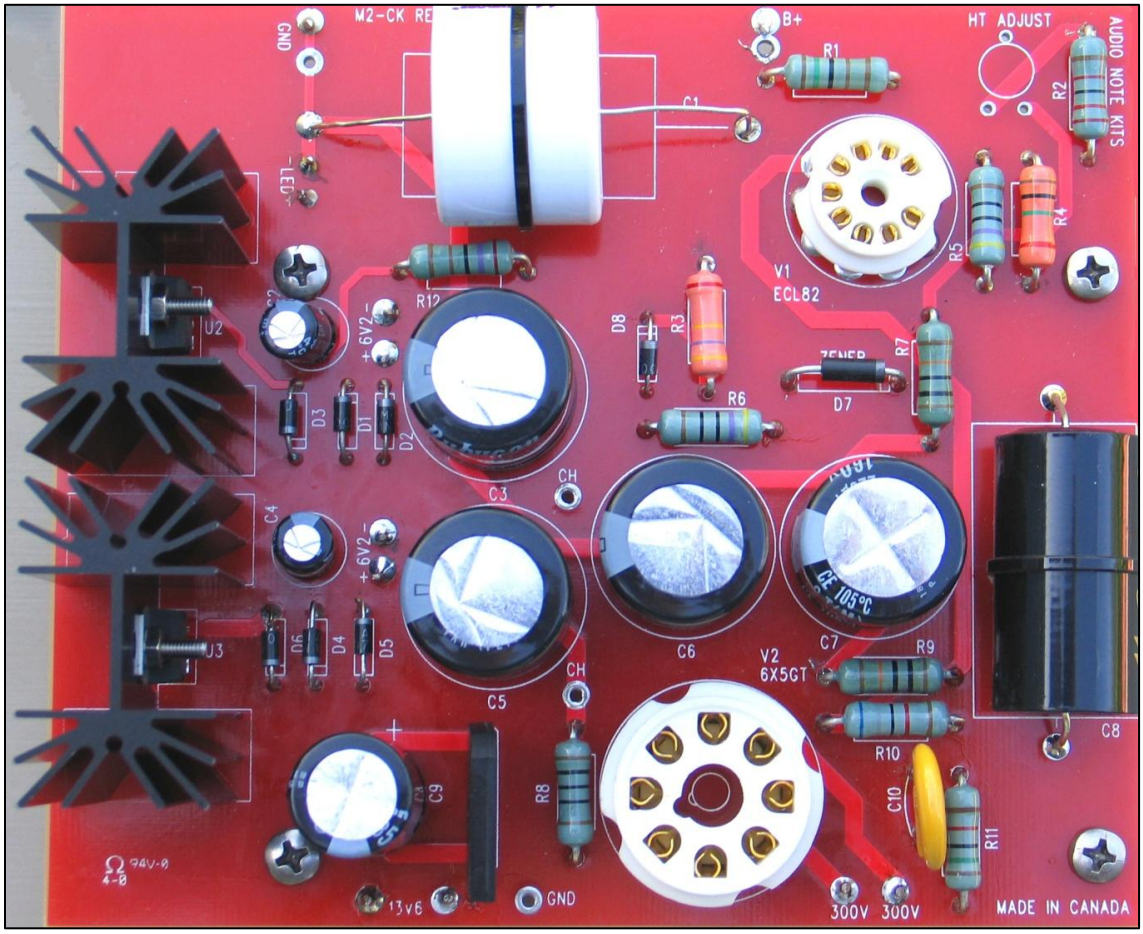

- ☐ Install the 2 film capacitors, C1 and C8. It's not a bad idea to secure these large capacitors with cable ties, as shown; there are holes in the board for that purpose.
- ☐ Add the 4 M4 standoffs to the board.

That completes the build of the M2 Power Supply board! Now we'll tackle the additional wiring.

www.AudioNoteKits.com
audionotekits@rogers.com

3.9 Additional Wiring

In this section we'll be adding the following wires to the M2 Power Supply board in advance of installing it in the chassis:

- Red–Red twisted pair of 18g to connect to 300V 300V
- Black–Red twisted pair of 18g to 13V6
- Black–Red twisted pair of 18g to the 8-pin valve base, pins 2 and 7
- Red HT wire from B+
- Black HT wire from GND
- LED wires

Have a look at the graphic and pictures below to familiarize yourself with these wires and where they're located:

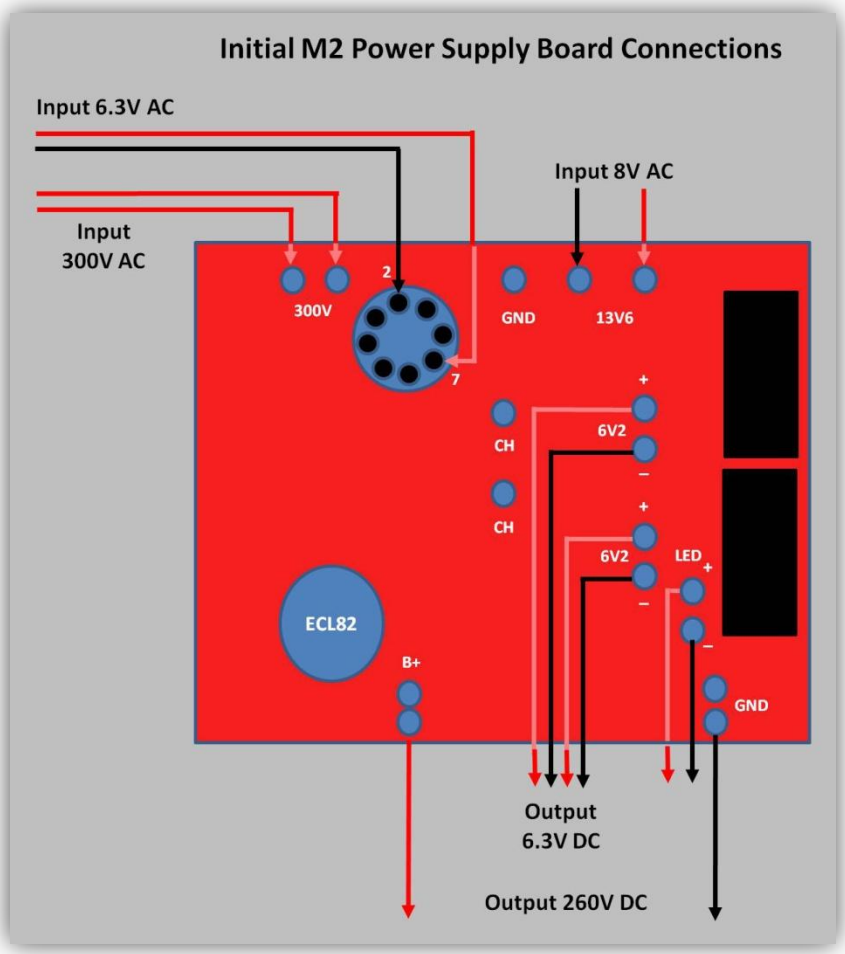

The marking '13V6' on the board is a legacy of the original design: we'll be attaching the 0–8 wires from the Mains secondary here. Don't worry about it!

www.AudioNoteKits.com
audionotekits@rogers.com

Let's have another look at the top and bottom of the board:

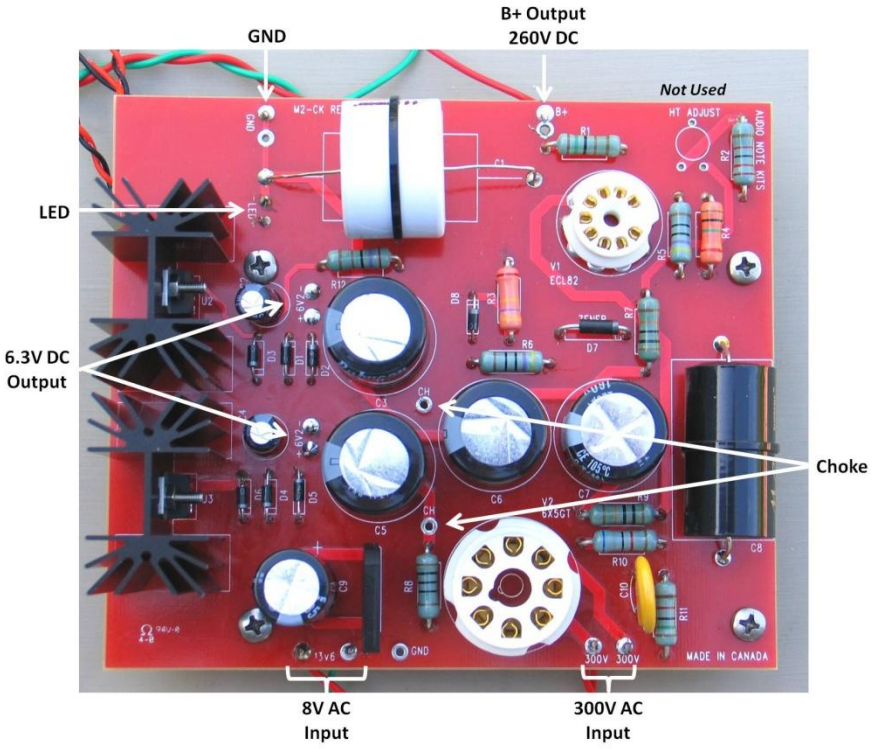

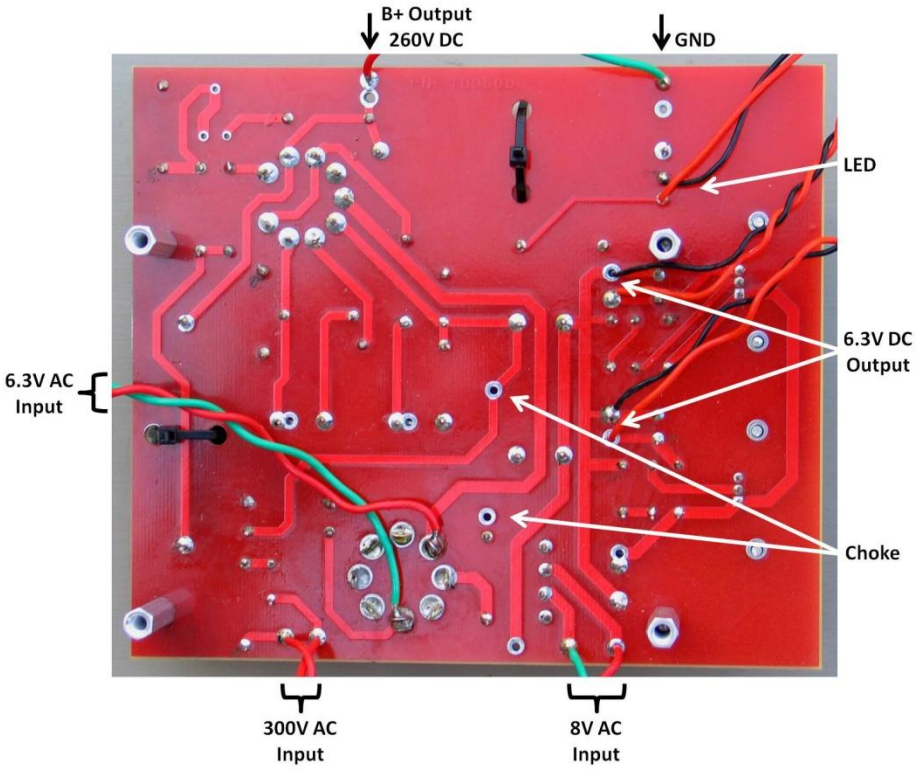

www.AudioNoteKits.com
audionotekits@rogers.com

Now let's go through these tasks step by step; be sure to consult the picture above or the high resolution picture on your CD, as needed.

- ☐ From Wire Bag #1, take the Red–Red twisted pair. Strip the end of the wires, tin them, insert them from the underside of the board into the two holes on the M2 board that are marked '300V', then solder them on the top side and cut off the excess.
- ☐ Similarly, take a Green–Red twisted pair and connect it to the two holes on the M2 board that are marked with '13V6' in the middle. It doesn't matter which color wire goes to which solder tab.
- ☐ Now take the last Green–Red twisted pair and, similarly, connect these wires directly to pins 2 and 7 of the 8-pin valve base. Again, it doesn't matter which color wire goes to which pin.

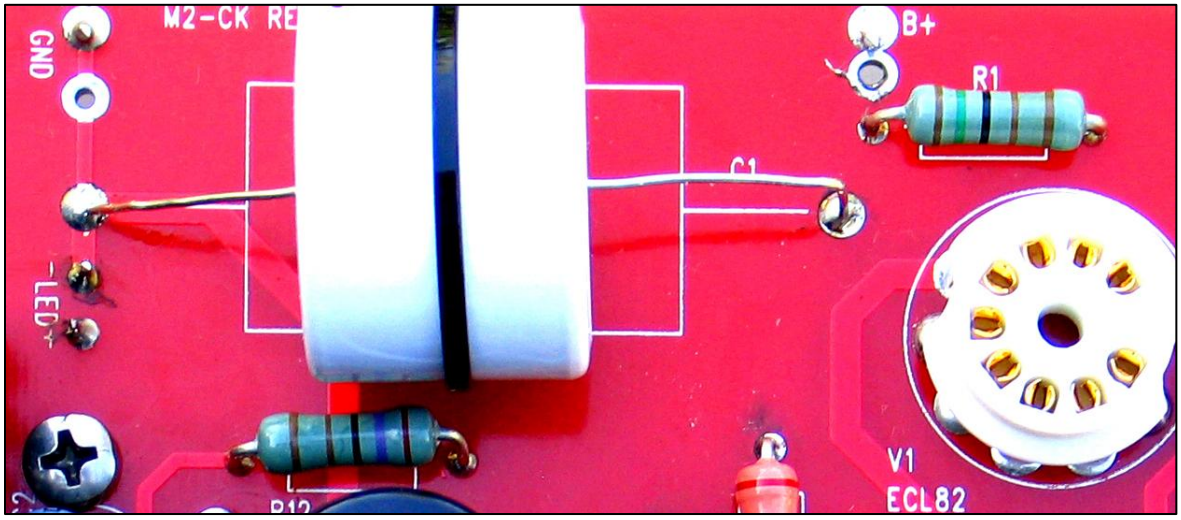

- ☐ Look closely at the picture above. From Wire Bag #3, take a Red wire and connect it to the B+ and a Black wire to the GND (on the far side of C1, the 2.7uf capacitor), from the underside of the board. Clip of the remaining lead on the top side. The other ends of the wires will be connected later to the Analog board.
- ☐ Connect the twisted wires of the LED harness to the underside of the board where it is marked LED '+' , '–'. Connect the Red wire to the '+' and the Black wire to the '–'.

Next we'll be making wire connections between the Mains transformer and the M2 Power Supply board. It's probably a good time to take a bit of a break.

www.AudioNoteKits.com
audionotekits@rogers.com

3.9.1 Connecting to the Mains Transformer and Choke

Now we'll make connections between the Mains transformer and the M2 Power Supply board. Take your time on this section and start when you're fresh. It's a fairly tight fit between the Mains and the M2 board in the chassis, so go slow and carefully figure out how much wire you're going to trim off. Also figure out how you want to route the wire under the board to the Mains transformer: always give yourself a little slack, but try and do a nice neat job on this section of the build.

Plan ahead! Check out the schematic below to see if what you are doing makes sense!

The filament heating of the 6X5 and ECL82 tubes are not shown on this schematic.

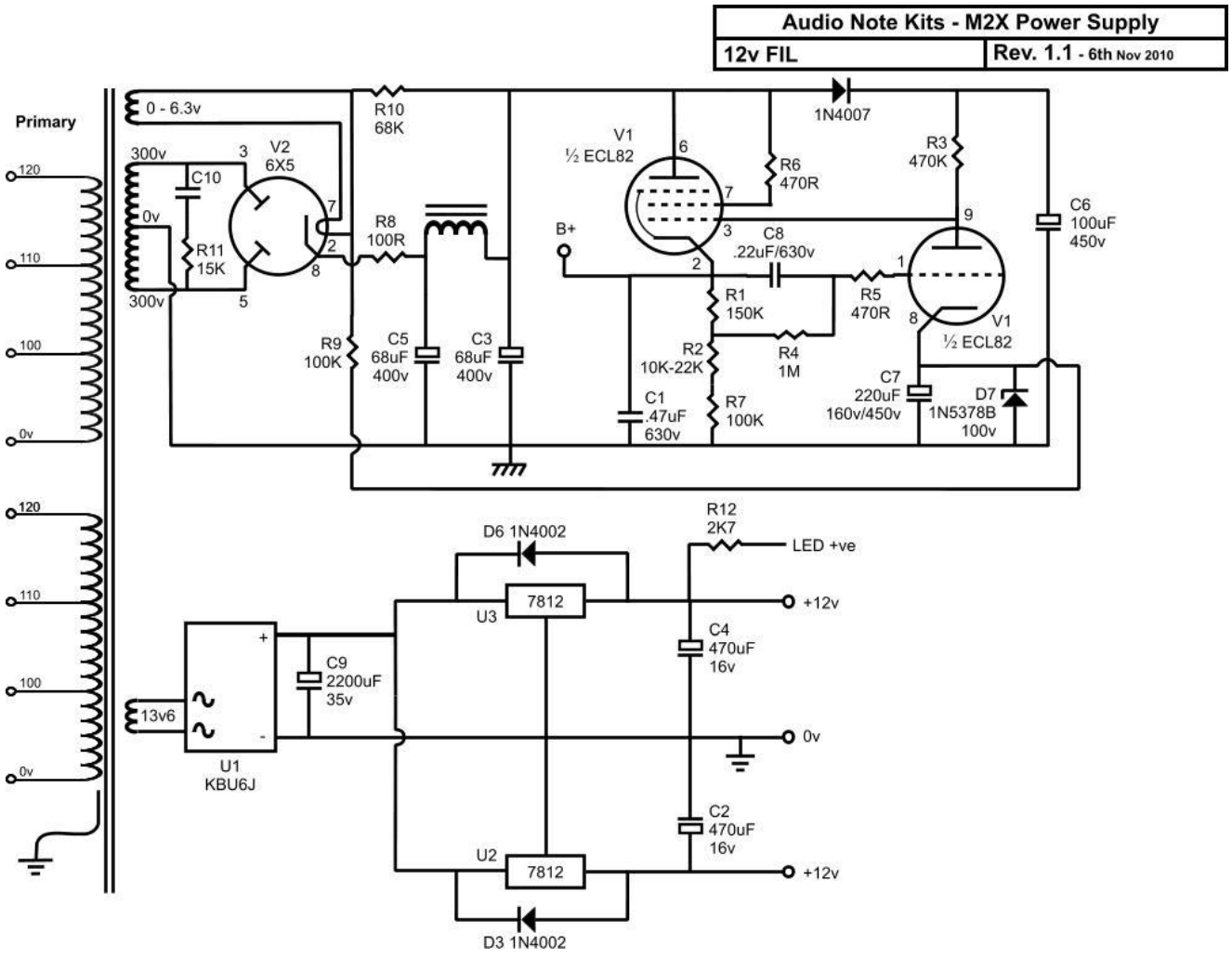

www.AudioNoteKits.com
audionotekits@rogers.com

Here's a graphic showing what we're going to do.

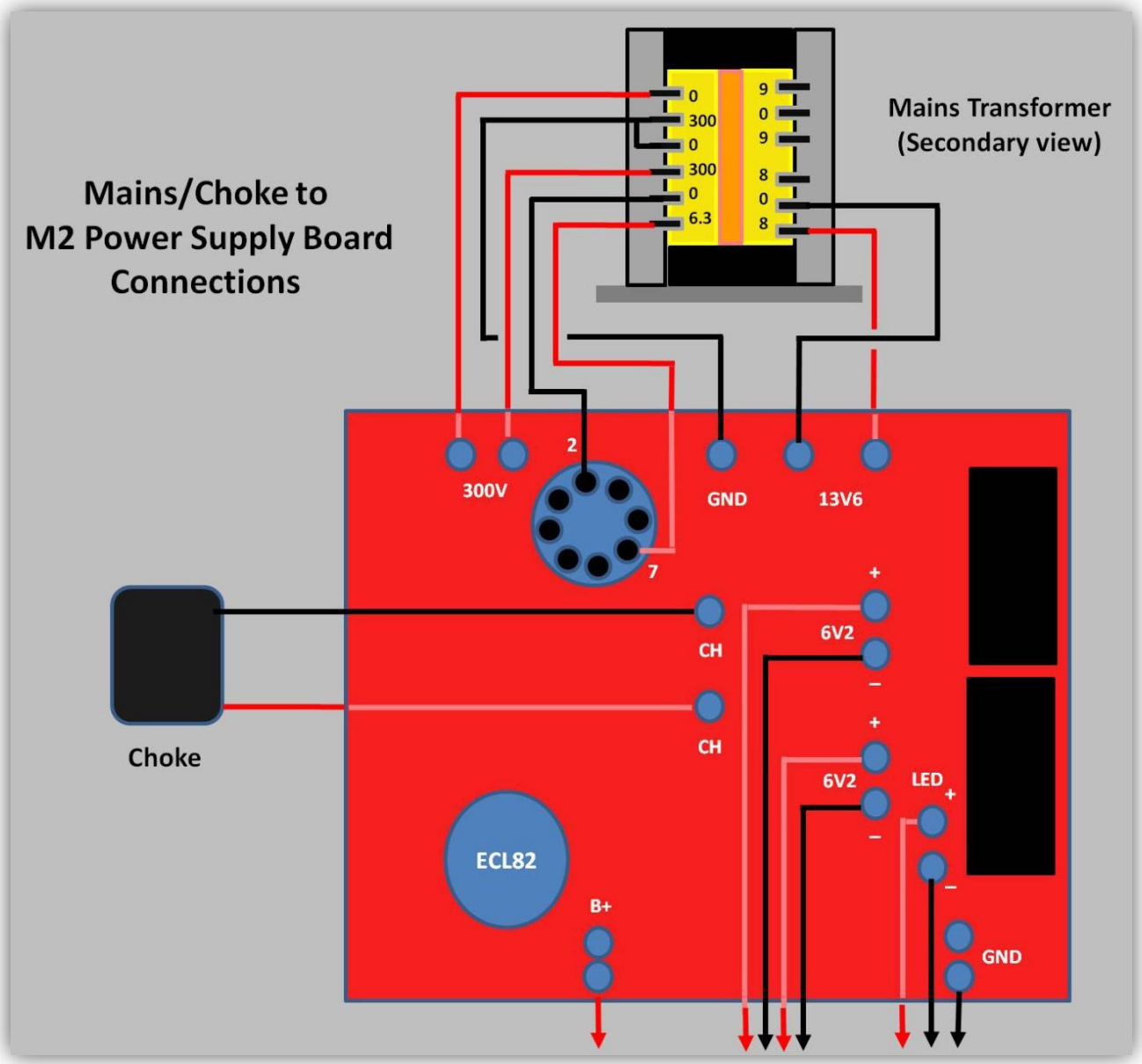

www.AudioNoteKits.com
audionotekits@rogers.com

Let's get started:

A good first step is to collect the wires that you've already attached to the M2 board, position them so that they are pointing in the direction of the Mains transformer and will be coming out from underneath the board between the two standoffs towards the Mains.

While the board is upside down, let's connect the Choke wires from the CH-180.

- ☐ Twist the Red and Black wires from the Choke, route them behind the Mains transformer (you can use some heatshrink here, if you like) to CH CH on the M2 board: there is no orientation — either wire can go in either CH. Trim the Choke wire lengths, and thread them through the underside of board, and solder. Then flip the board right side up and trim the wires.

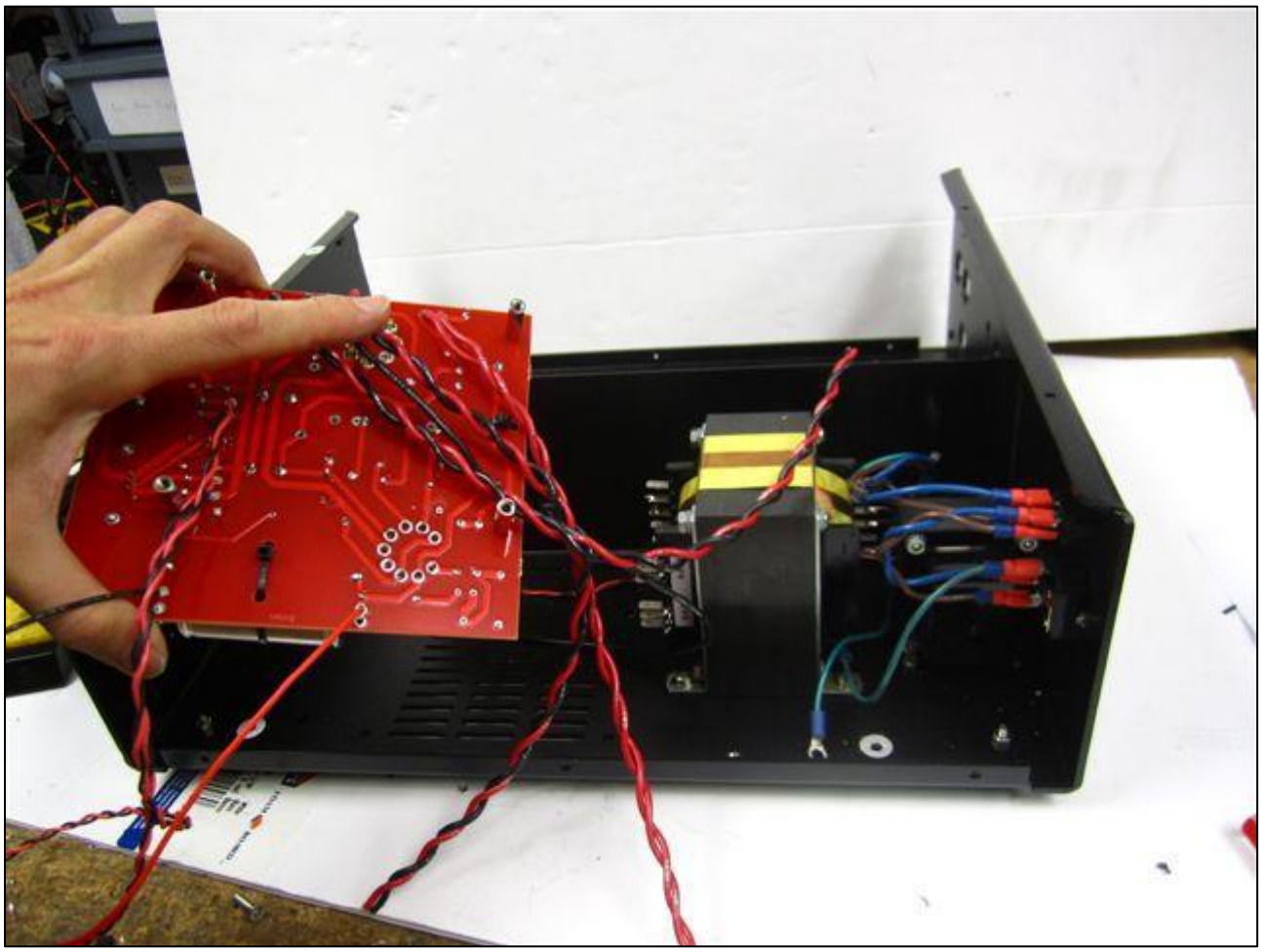

www.AudioNoteKits.com
audionotekits@rogers.com

Here is the M2 Power Supply board in the correct orientation:

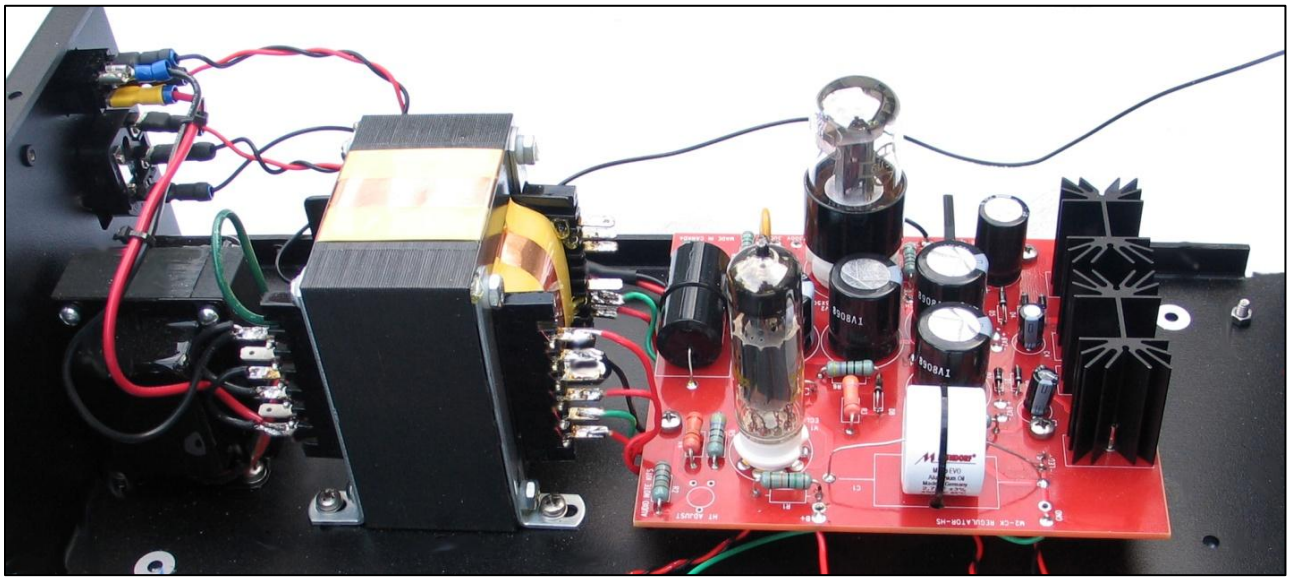

Now we'll make a number of connections from the M2 Power Supply board to the Mains transformer. We recommend that you use 2 screws to lightly secure the M2 board in the chassis: it's quite tight to the Mains, but the screws will ensure that you'll know what the M2 board's final position will be and that will help you figure out how long the wires need to be and how to route them.

When you make these connections, you'll want to cut the wires to length, giving yourself a little slack. Then strip and tin the ends. You'll also want to tin the Mains transformer pins, so that you'll be able to make good connections as you apply heat. That way, the two tinned surfaces should adhere quickly.

www.AudioNoteKits.com
audionotekits@rogers.com

Note that, earlier you made a bridge between the two middle pins on the 0–300–0–300 windings of the Mains and connected a long Black 18g wire to it. Now,

- ☐ Connect the Black wire coming from this bridged point to the M2 Power Supply board in the GND position located near the '13V6' tabs.
- ☐ Connect the Red–Red twisted pair that comes from the '300V' points on the M2 board to the top and bottom pins of the 0–300–0–300 windings of the Mains. Here's a picture of that connection:

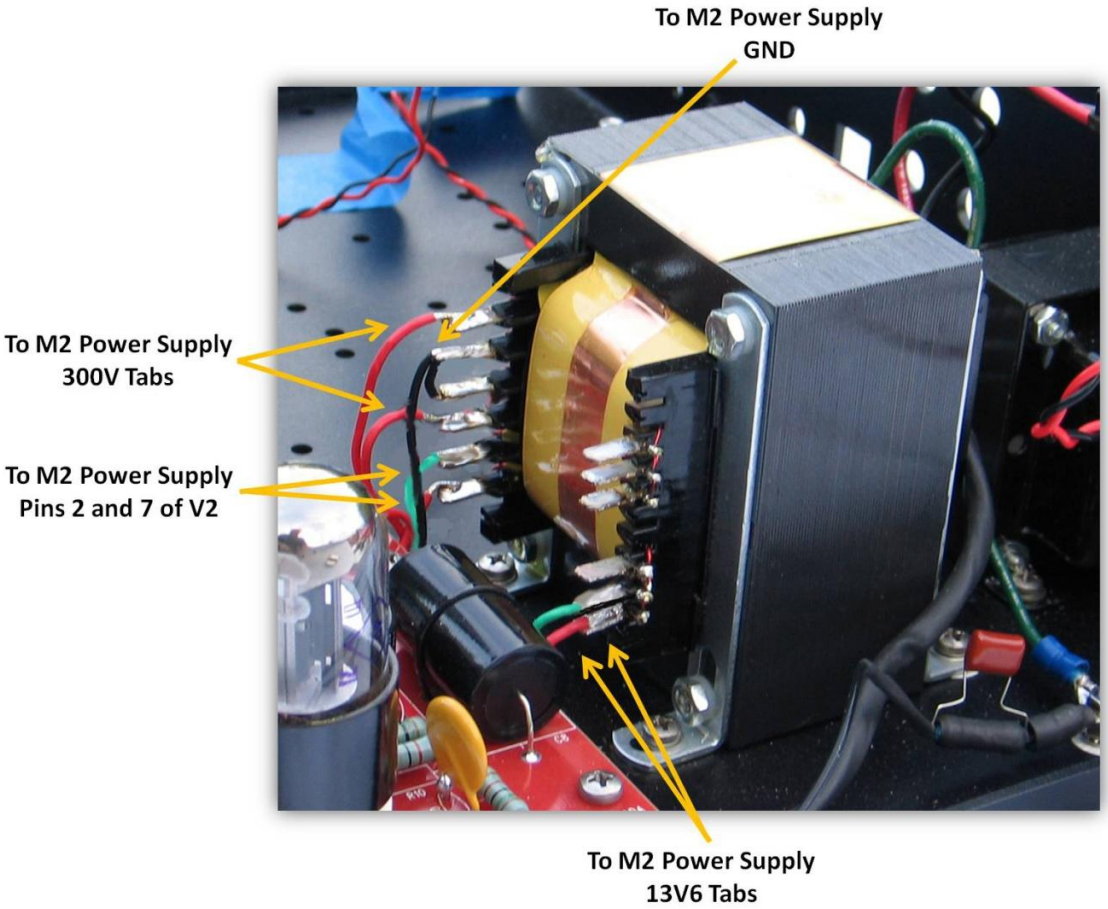

- ☐ Now connect the Green–Red twisted pair that comes from the '13V6' on the M2 board to one of the two '8's and the '0' on the 8–0–8 winding of the Mains, as shown.
- ☐ Connect the Green–Red twisted pair that comes from pins 2 and 7 of the 8-pin valve base to the 0–6.3 winding of the Mains, as shown.

www.AudioNoteKits.com
audionotekits@rogers.com

NOTE

The following wires coming from the M2 Power Supply board are not yet connected:

- B+ Red
- GND Black
- Filaments for Analog board
- Prepared wire from the chassis Ground with the 10R resistor and capacitor

That completes the M2 Power Supply board. Let's test it!

www.AudioNoteKits.com
audionotekits@rogers.com

Section 4

M2 Power Supply Testing

In this section we are going to electrically test the M2 Power Supply to make sure all is well before we build and connect the other boards in the DAC.

4.1 Installing the Mains Fuse

Let's start by installing a 1A Slo-Blo fuse (from the IEC bag) into position as shown.

- ☐ If the fuse holder is already installed in the IEC plug, use a screwdriver, a flat edge, or your fingers to pull it out — you'll need to squeeze it to completely remove it.
- ☐ Install the fuse in the small plastic fuse holder and insert it into the IEC. (You can ignore any lettering like '240V only' — there is only one fuse holder type for all world voltages.)

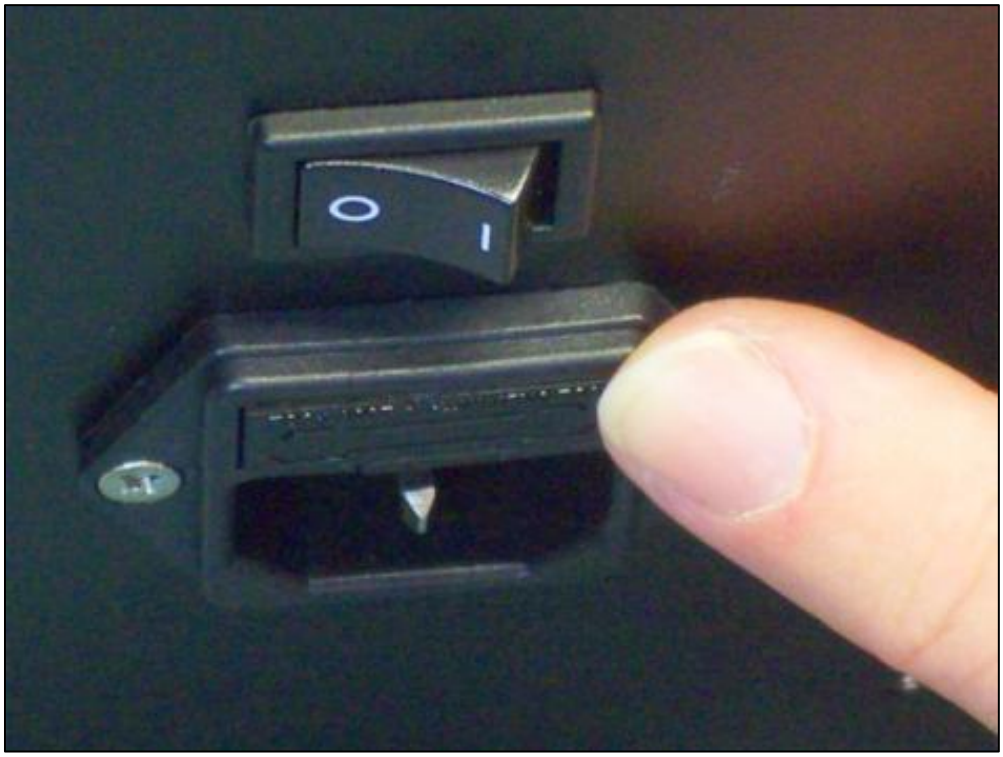

- ☐ With the fuse installed insert the holder into the IEC plug. Now let's test the Power Supply.

READ THE ENTIRE REMAINING SECTION FIRST BEFORE TAKING ANY ACTIONS

www.AudioNoteKits.com
audionotekits@rogers.com

4.2 Installing the LED Indicator

The LED connected to the M2 Power Supply board will be the first indicator that we have power. We suggest taping the LED temporarily to the chassis as shown. *Make sure the metal leads of the LED are not touching each other or any other circuitry or chassis. Also make sure that the longer LED lead (POSITIVE) mates with the Red wire in the connector and that the LED is pushed in all the way.*

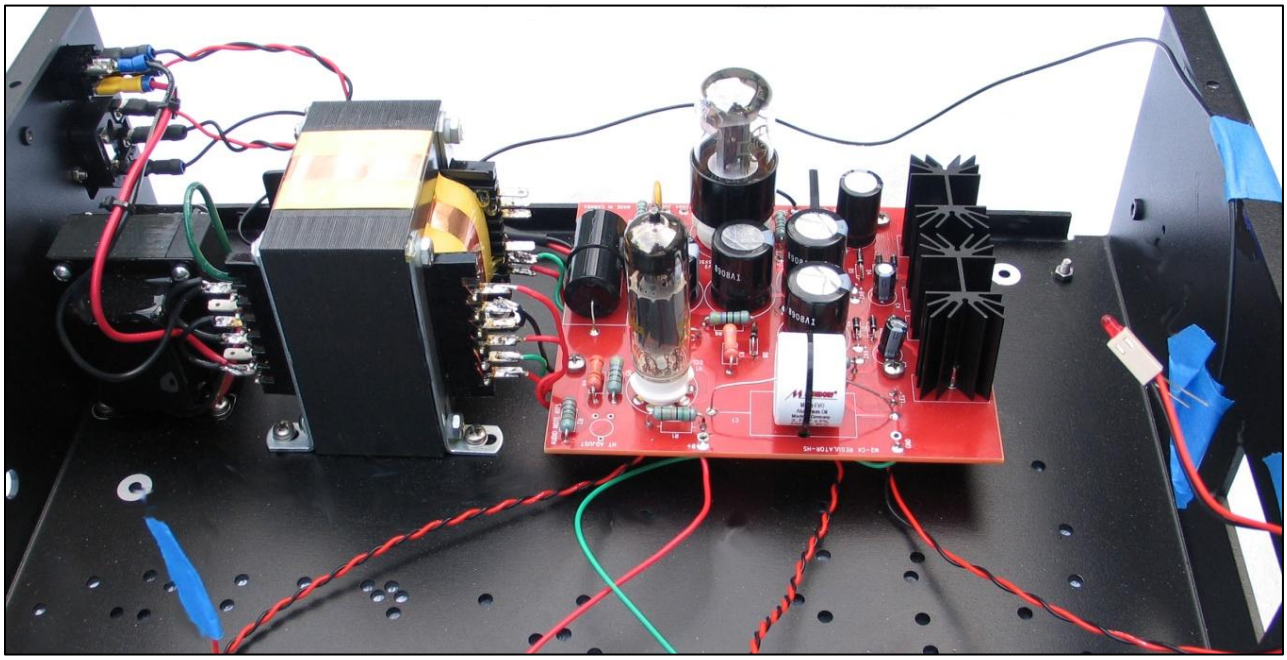

4.3 Installing the Tubes

Now let's install the tubes into the M2 Power Supply board: the 6X5 goes in the 8-pin valve base and the ECL82 (or 6BM8) in the 9-pin valve base.

4.4 Tidying Up

Seeing that we have a number of loose wires coming from the M2 board, let's tape the ends of these wires to make sure that they do not short with one another when we test with power. This includes the filament wires and the B+ and GND wires coming from the M2 board that are not connected, along with the prepared wire from the chassis Ground with the 10R resistor and capacitor.

- ☐ Put some masking tape on these wires and make sure they not in contact with anything!

4.5 Ohm Check

THE UNIT IS STILL OFF AT THIS POINT

Before we do these checks, let's go over an important term: the High Tension, HT voltage, and B+ are all the same thing. This is typically the highest DC voltage in the circuit and is the voltage that we will be supplying to the tubes in our audio signal path.

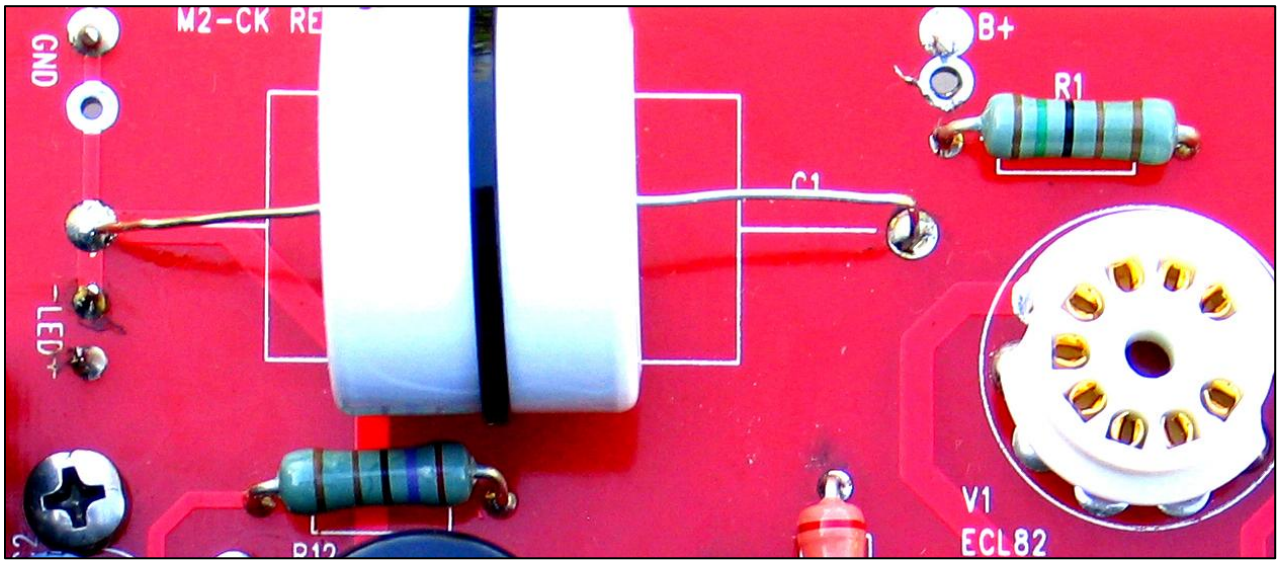

If you have a multimeter set it to Ohms and measure the resistance from B+ to GND on the M2 Power Supply board. You can see from the picture above the location on the board to find these two points. You should see a high impedance reading in the 125K ohm range: this is a good sign! *If you have a very low ohmage there could be a problem and you may want to contact us first before going any further.*

4.6 Electrical Testing

THE UNIT IS STILL NOT PLUGGED IN AT THIS POINT

Before the first power on we suggest the following steps:

- Make sure that you have a quiet environment when you are turning the unit on for the first time: that way, if there is a problem with the circuit, you will be able to see and hear a crackle or a vibration or hum, etc., if there is any.
- If you have a Variac it would be helpful to use it so you can power on slowly and check DC voltages. If not, we'll just turn it on.

www.AudioNoteKits.com
audionotekits@rogers.com

- ☐ Make sure the amplifier is OFF: press the rocker switch (ON is '1'/OFF is '0') so that the '0' is flat against the chassis and the '1' is off the chassis — this is the OFF position, shown below.

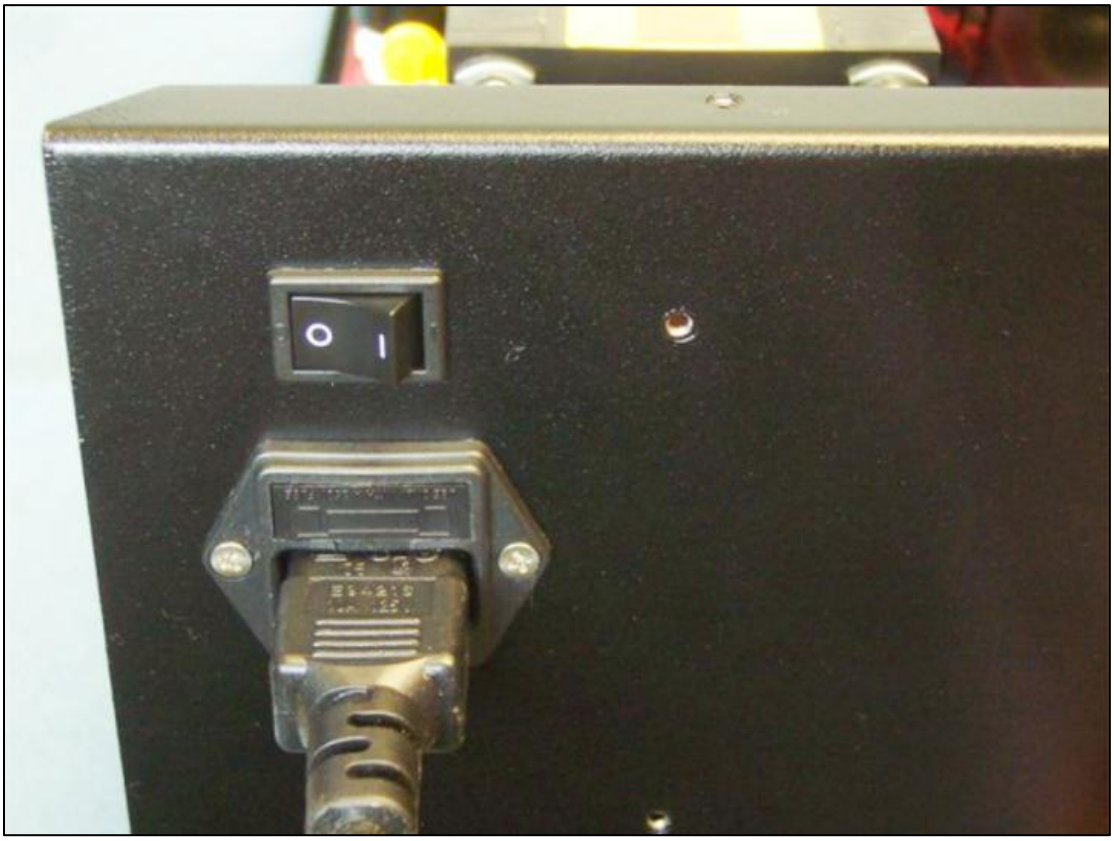

- ☐ Take a power cord and plug the unit in.
- ☐ Press the rocker switch such that the '1' is pushed flat against the chassis — this is the ON position.
- ☐ Observe the LED turning on and look for a glow from the tubes.

GET READY TO SWITCH THE UNIT OFF IMMEDIATELY IF ANYTHING GOES WRONG

Get your multimeter ready — we'll need it for the High Tension (HT) check.

➡ *Be very careful as you do this not to touch anything in the unit with your body or create a short with the multimeter leads.*

www.AudioNoteKits.com
audionotekits@rogers.com

Use the following graphic as a guide as to the location of the test points:

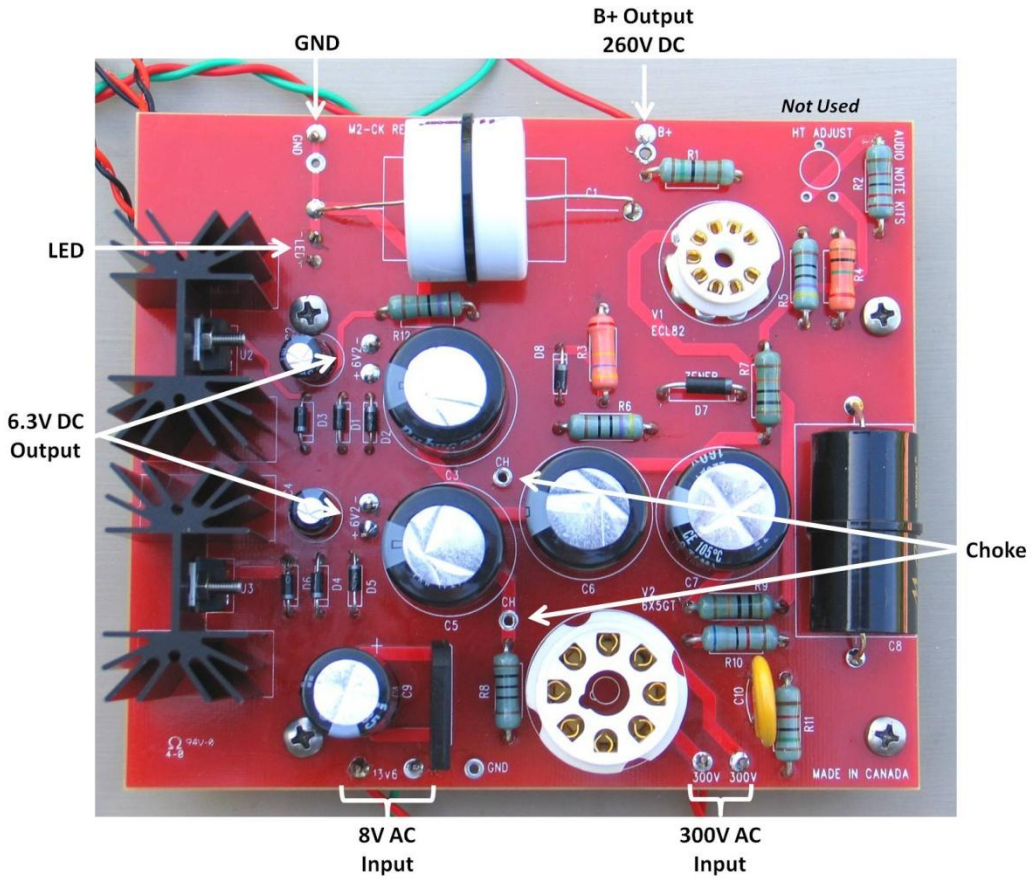

- ☐ Measure from B+ to GND on the M2 Power Supply board: use the ground point (GND) closest to the LED section. You should read approximately 260V DC.
- ☐ Measure the filament voltages: these are the two connections labeled '+6V2–'[3] on the top of the board. Connect you Black probe to the '–' and your Red probe to the '+'. These should read approximately 6.3V DC.

If there is a problem with any of the above voltages, switch to AC volts and measure the 300 300 points on the M2 board — you should get somewhere over 600V AC. If your meter does not go that high try measuring from the GND beside 13V6 to each one of the '300' inputs on the board and you should get approximately 300V AC or slightly higher.

- ☐ While in AC mode on your multimeter measure the '13V6' pads on the M2 board: we've used one of the 8 taps and the 0 tap from the 8–0–8 taps, which should give us approximately 8V AC. Just a reminder to ignore the implication of the '13V6': we want 8V AC.

[3] We can't remember why these are stenciled as '6V2', rather than '6V3', but it makes no difference. Think 6.3V.

www.AudioNoteKits.com
audionotekits@rogers.com

4.7 Voltage Check Summary

4.7.1 DC Voltage Checks

Location	Approximate Reading
B+ to GND	260V DC
+6V2–	6.3V DC
+6V2–	6.3V DC

4.7.2 AC Voltage Checks

These are optional if DC voltages are correct.

Location	Approximate Reading
300 300	> 600 AC
13V6 13V6	8V AC

If you have correct voltage readings on the M2 Power Supply board then "Congratulations!" are in order and you have completed the first half of the kit.

4.8 Last Steps

UNPLUG THE KIT FROM THE WALL

- ☐ One last step: you'll remember that we did not solder the heatsinks to the M2 Power Supply board earlier (we wanted to complete our testing first). Now go back and solder the 2 heatsinks to the board. You're done!

www.AudioNoteKits.com
audionotekits@rogers.com

Section 5

Digital Power Supply Board

5.1 Overview

In this section we'll be building, installing, and testing the Digital Power Supply board that is used in the DAC 2.1 Signature kit.

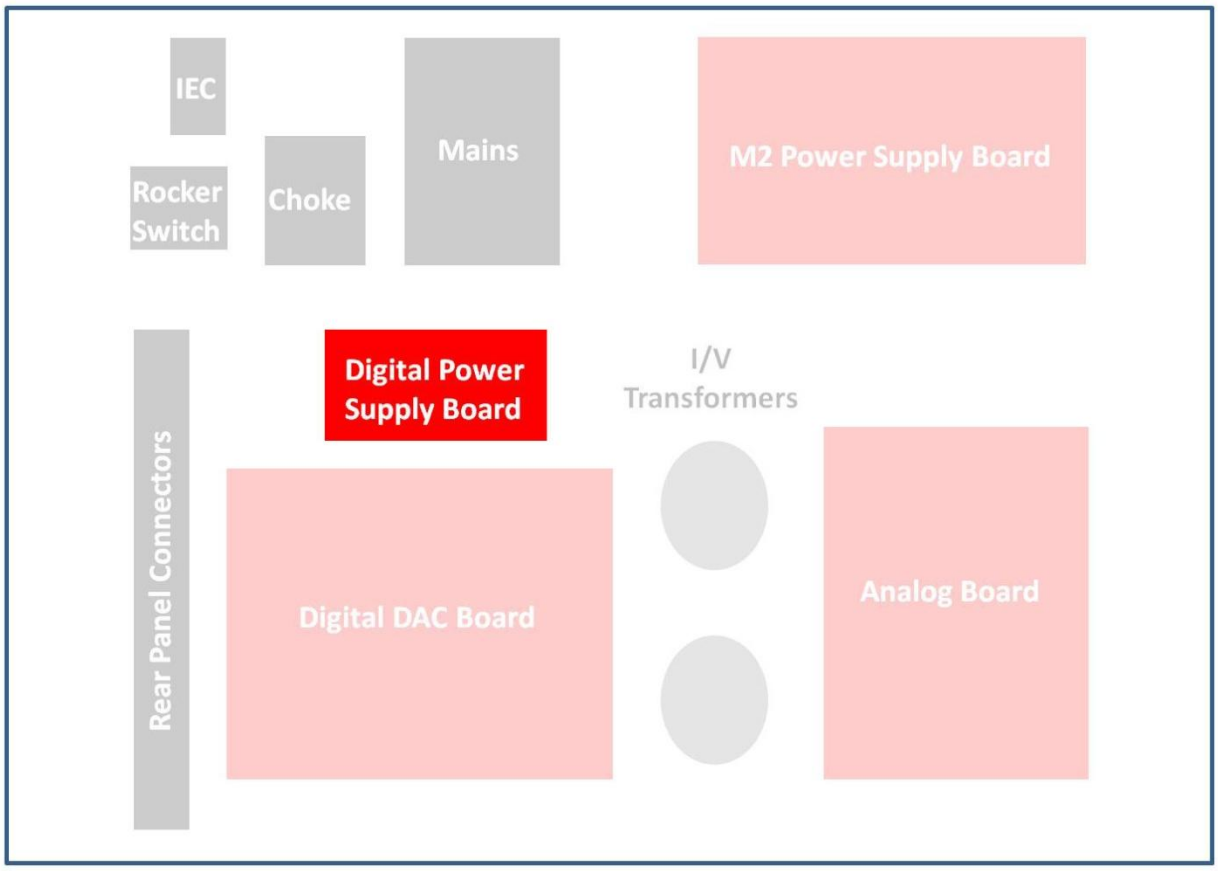

This small board receives an 18V AC signal from the 9–0–9 taps on the Mains transformer and converts it to several DC voltages that are required by the DAC board. The outputs are A+, AGND, A–, D+, and DGND. *The S– solder tab is not used in the DAC 2.1 Signature.*

www.AudioNoteKits.com
audionotekits@rogers.com

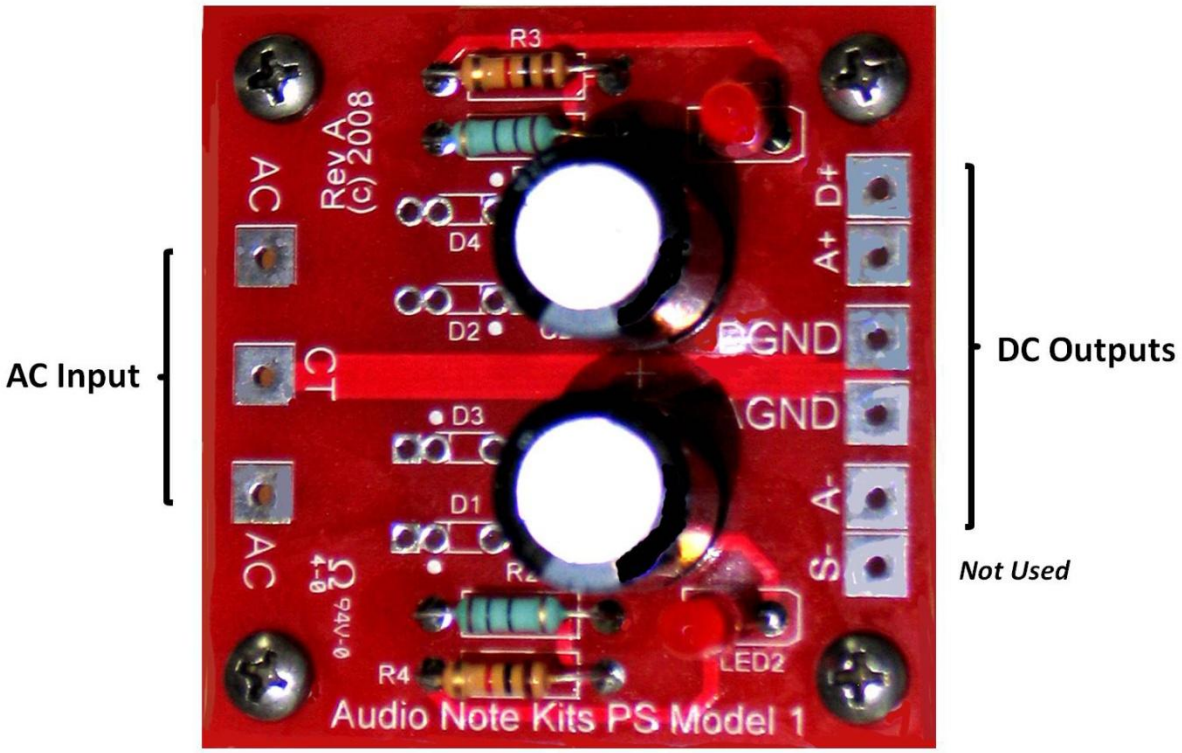

5.2 Parts List

Category	Quantity	Part	Designation
Capacitors (Electrolytic)	2	4700uf 16V	C1, C2
Resistors	2	1K	R3, R4
	2	10R	R1, R2
Semiconductor Devices	4	Schottky Diodes	D1, D2, D3, D4
	2	LEDs	LED1, LED2

www.AudioNoteKits.com
audionotekits@rogers.com

5.3 Construction

If you are an advanced builder we suggest that you read through this section completely and then proceed with your build from the parts list — otherwise we suggest you work through each step in the order suggested.

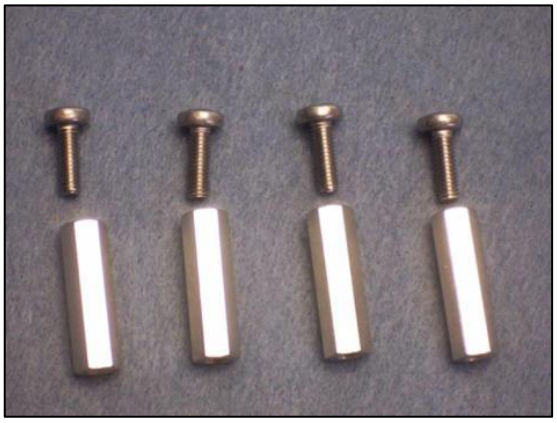

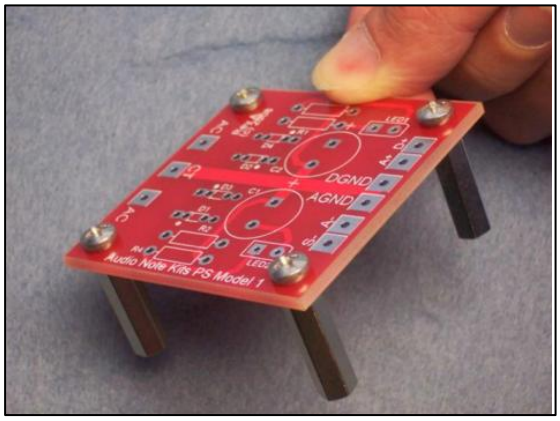

- ☐ Install the four 20mm standoffs provided, with 10mm M4 PAN screws. This will make it easier to work with as we install the components onto the board.

5.4 Installing the LEDs

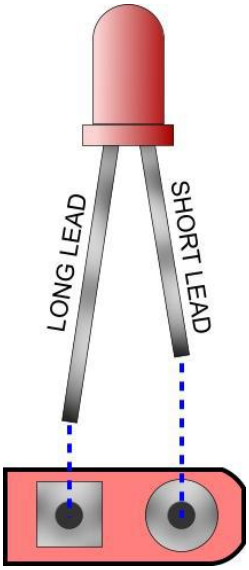

- ☐ Install the LEDs into the LED1 and LED2 positions. You will notice a square solder tab on the PCB stencil and a rounded solder tab; insert the long lead of the LED into the square tab.

www.AudioNoteKits.com
audionotekits@rogers.com

5.5 Installing the Capacitors

- ☐ Install the two 4700uf electrolytic capacitors in the board. The stencil on the board for each capacitor is a circle with a + sign beside it.

IMPORTANT NOTE

There are 2 '+'s on the PCB: Look at the diagram below and the picture, and remember that the NEGATIVE lead (with the stripe) goes in the round solder pad.

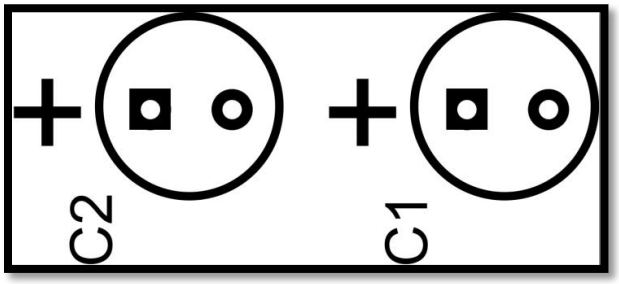

Don't be confused by the two capacitors close together. Only the POSITIVE side of each capacitor is stenciled on the board: you'll have to locate the NEGATIVE stripe on the capacitors as shown below and insert the capacitors correctly.

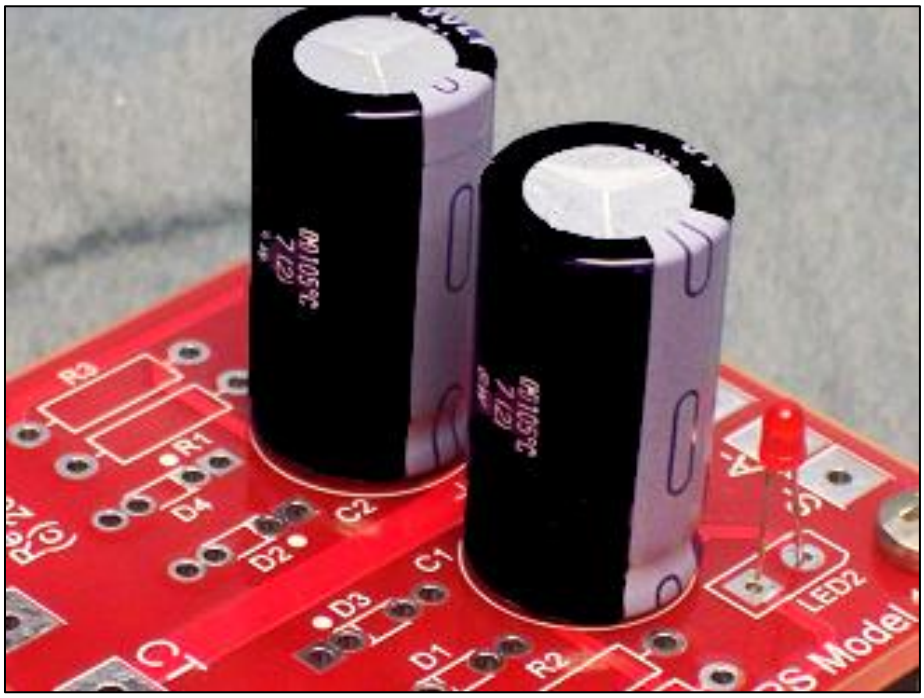

www.AudioNoteKits.com
audionotekits@rogers.com

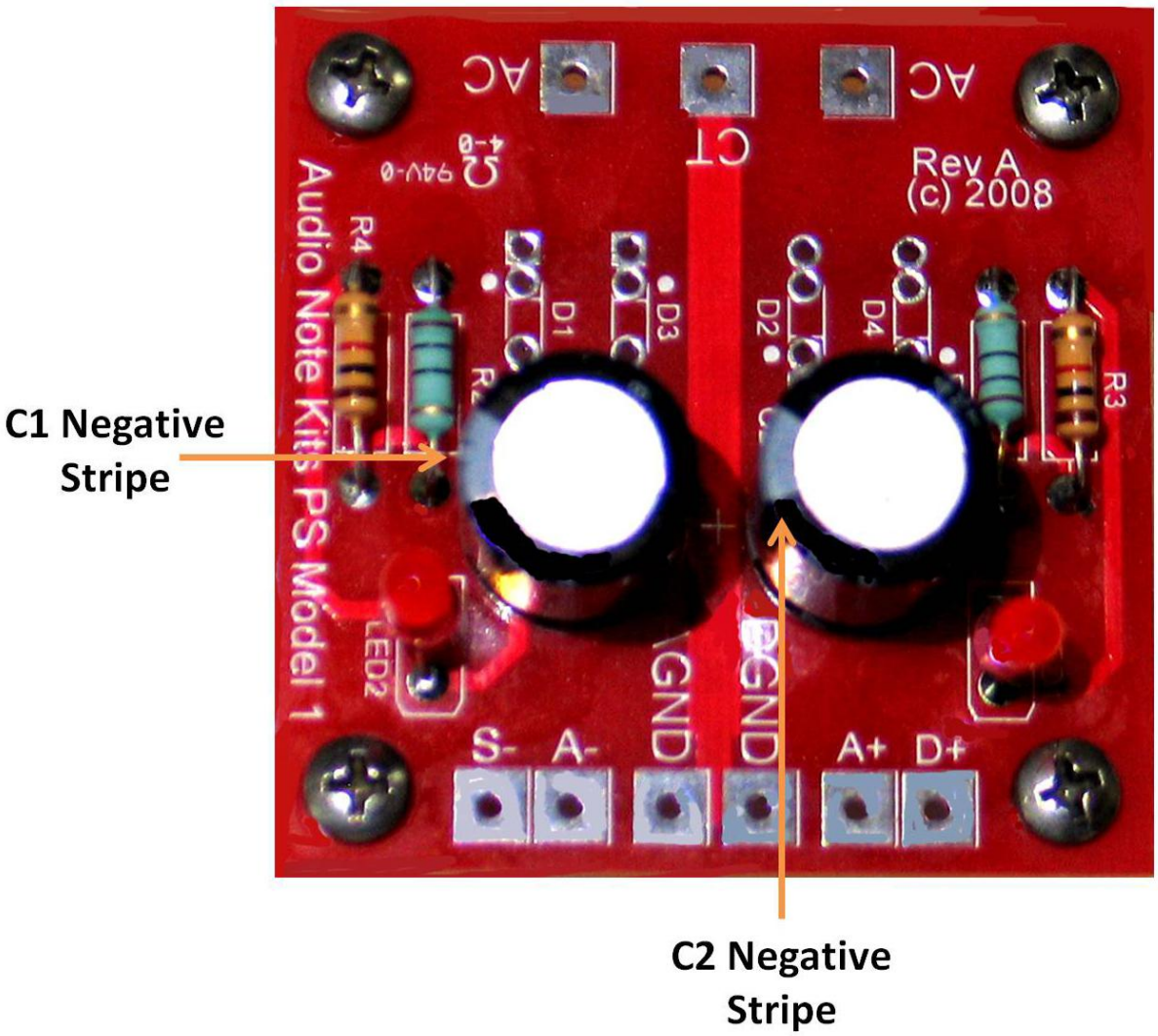

Here's a view of the whole board showing the capacitors correctly installed.

www.AudioNoteKits.com
audionotekits@rogers.com

5.6 Installing the Schottky Diodes

- ☐ Install the four Schottky diodes in their correct positions. Position the diodes as shown in the pictures below with the left lead — which is the cathode (NEGATIVE) — next to the White dot on the board.

Schottky Diodes Cathode (Negative)

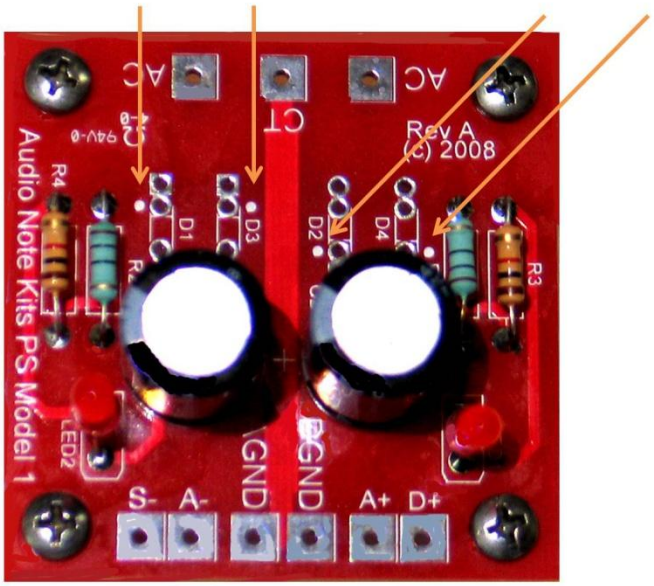

Here's we can see the Schottky diodes installed: they're in pairs, facing away from each other.

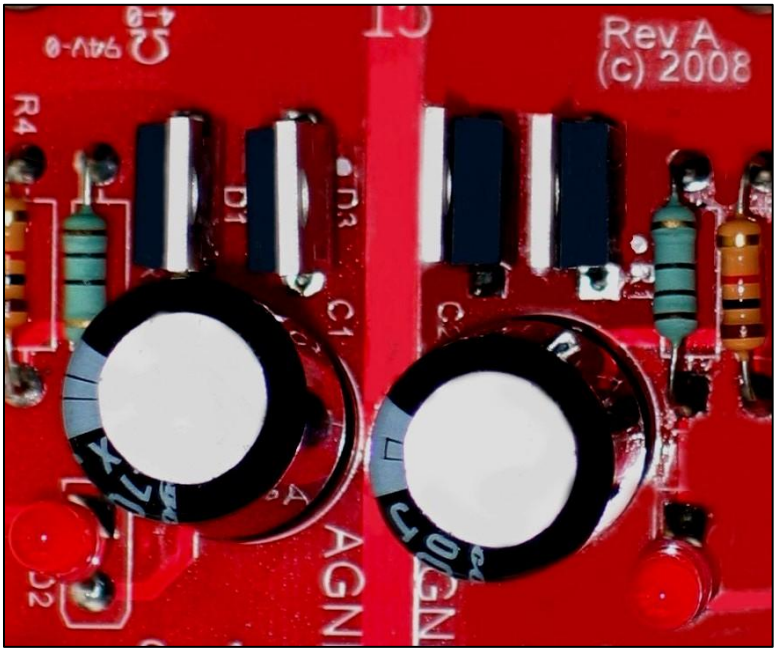

www.AudioNoteKits.com
audionotekits@rogers.com

5.7 Installing the Resistors

☐ Install R1, R2, R3, and R4 into their correct positions.

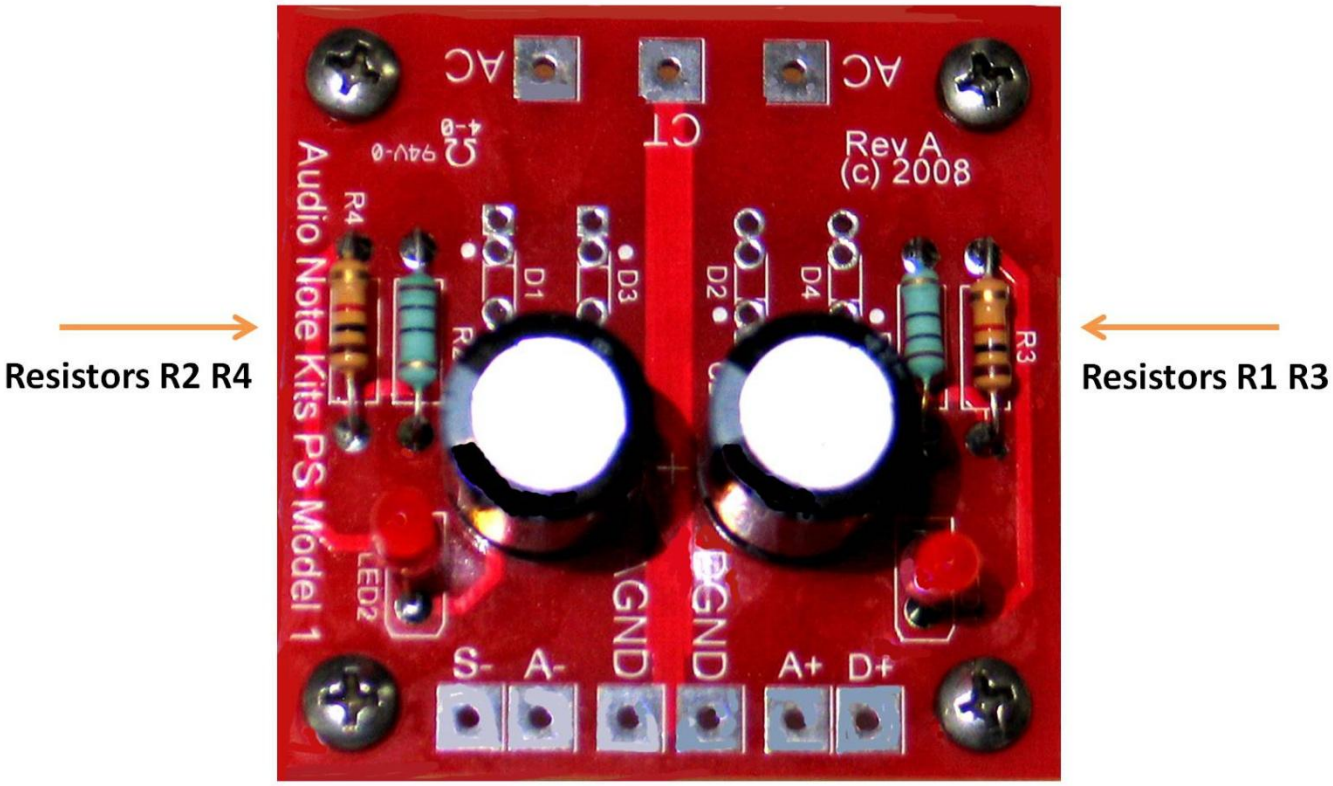

www.AudioNoteKits.com
audionotekits@rogers.com

5.8 Installation and Wiring

BE SURE THAT THE KIT IS NOT PLUGGED INTO THE WALL AT THIS POINT

Before we install the board, let's make a couple of connections which will make things a little easier later on. Have look at the following diagram:

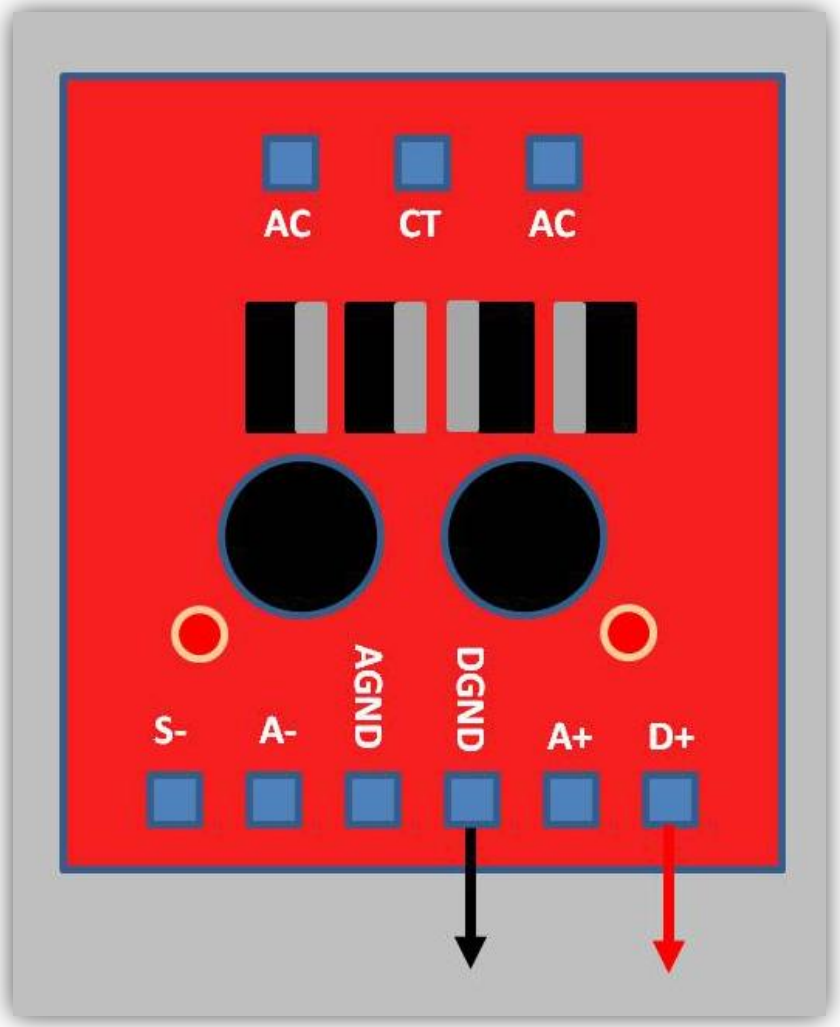

- ☐ Connect a Black wire from the underside of the board to DGND on the Digital Power Supply board. Leave the other end unprepared for the moment.
- ☐ Similarly, connect a Red wire from the underside of the board to D+. Again, leave the other end unprepared for the moment.

www.AudioNoteKits.com
audionotekits@rogers.com

- ☐ Position the Digital Power Supply board into the chassis with the DC voltage side (S–, A–, AGND, etc.) positioned away from the Mains transformer. There are a lot of holes, so it's a bit of a treasure hunt — but it really does fit!

For the next steps, have a look at the following diagram:

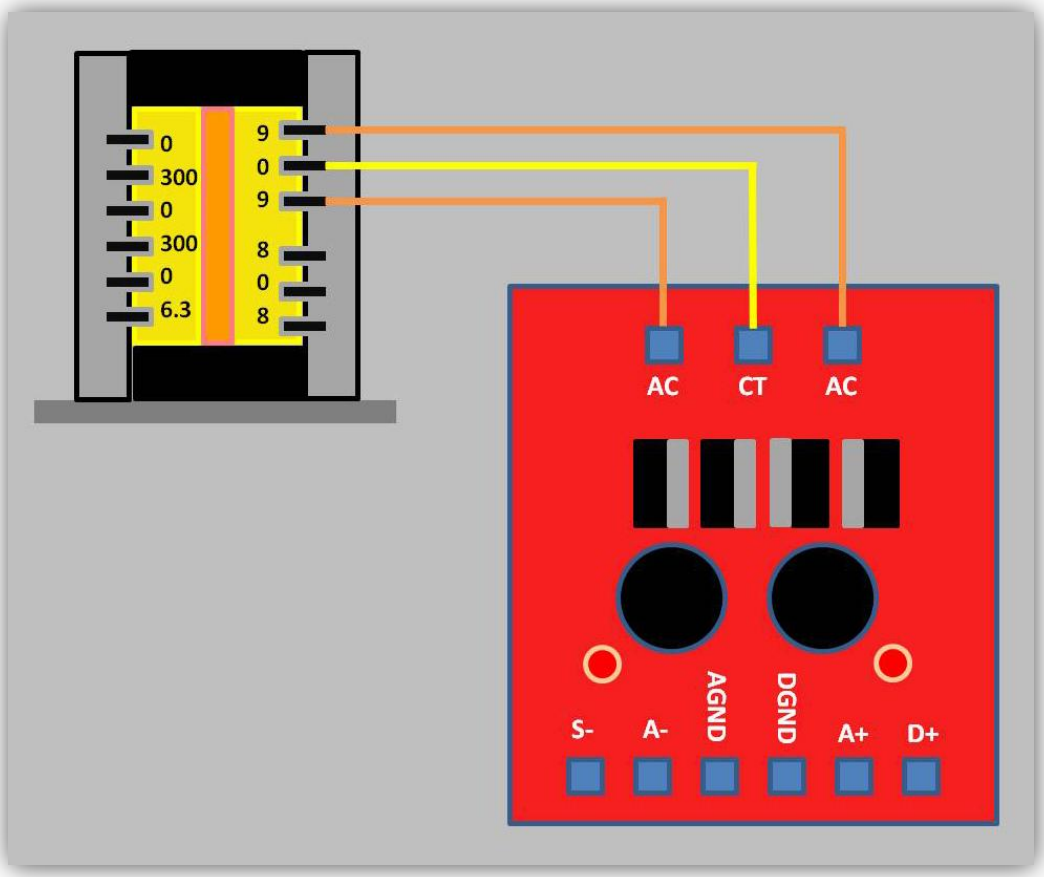

Take the prepared twisted Orange–Orange–Yellow wires and locate the 9–0–9 taps on the Mains transformer secondary.

- ☐ Tin the 9–0–9 taps on the Mains transformer. Don't cook the bobbin!

Let's start at the top and work our way down.

- ☐ Take an Orange wire and connect it to the top '9' tap.
- ☐ Take the Yellow wire and connect it to the '0' tap.
- ☐ Take the other Orange wire and connect it to the bottom '9' tap.

These Orange and Yellow wires then come around the transformer to be connected into the AC and CT pads on the Digital Power Supply board. Let's make those connections.

www.AudioNoteKits.com
audionotekits@rogers.com

- ☐ Connect one of the Orange wires (it doesn't matter which one) to one of the AC solder tabs on the Digital Power Supply board .
- ☐ Take the Yellow wire and connect it to the CT solder tab.
- ☐ Connect the other Orange wire to the other AC solder tab.

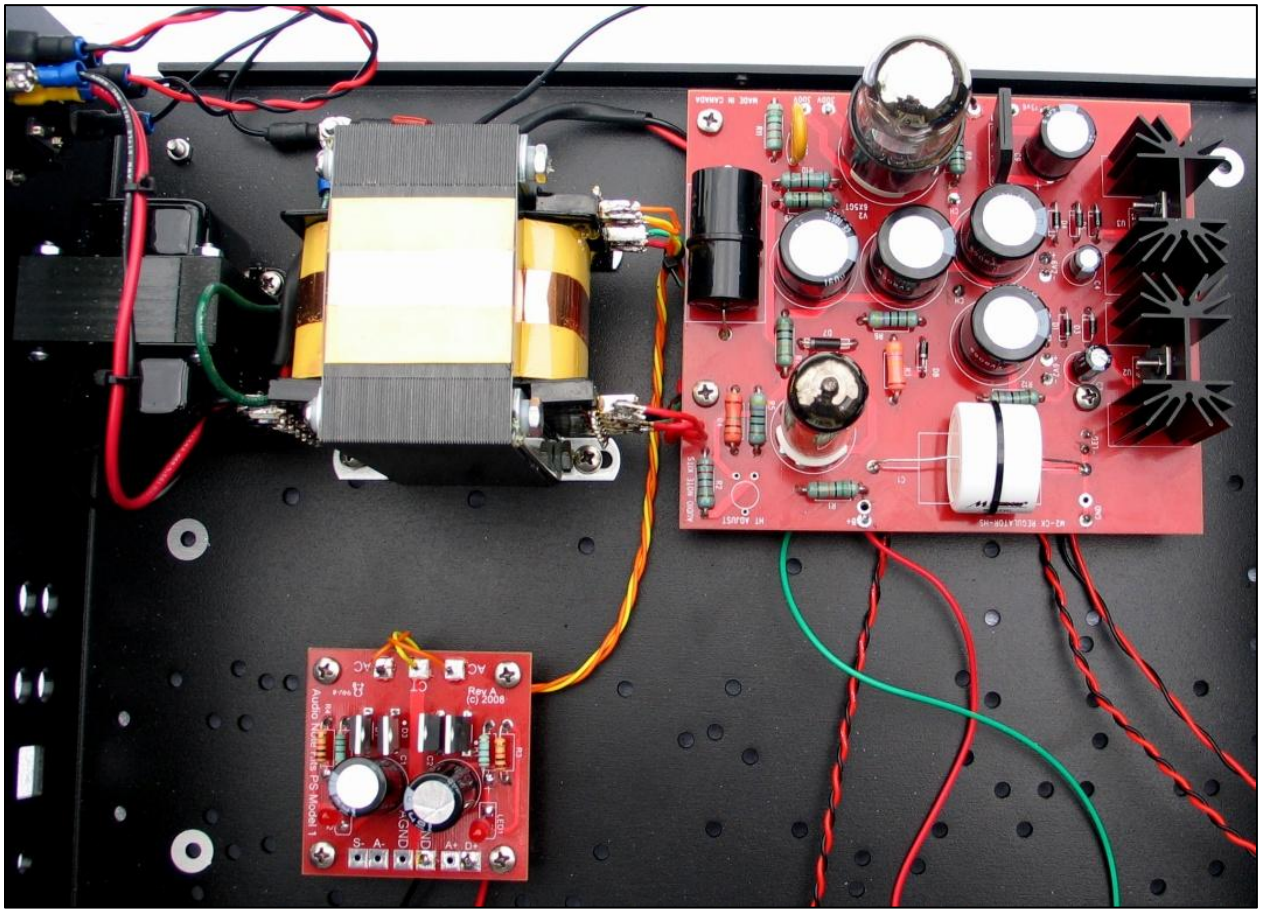

You should now have 3 wires connected between the Digital Power Supply Board and the Mains transformer. If you are feeling good about your connections install your AC plug into the back of the chassis and switch the unit ON. The LEDs should turn on.

www.AudioNoteKits.com
audionotekits@rogers.com

Now perform following voltage checks:

Location	Approximate Reading
Between A+ and AGND	+9V DC
Between D+ and DGND	+9V DC
Between A– and AGND	–9V DC

This completes the Digital Power Supply board section. If you are having any problems with your voltage checks feel free to contact us for support.

www.AudioNoteKits.com
audionotekits@rogers.com

Section 6

Analog Board

6.1 Overview

In this section we are going to build the Analog board for the DAC 2.1 Signature.

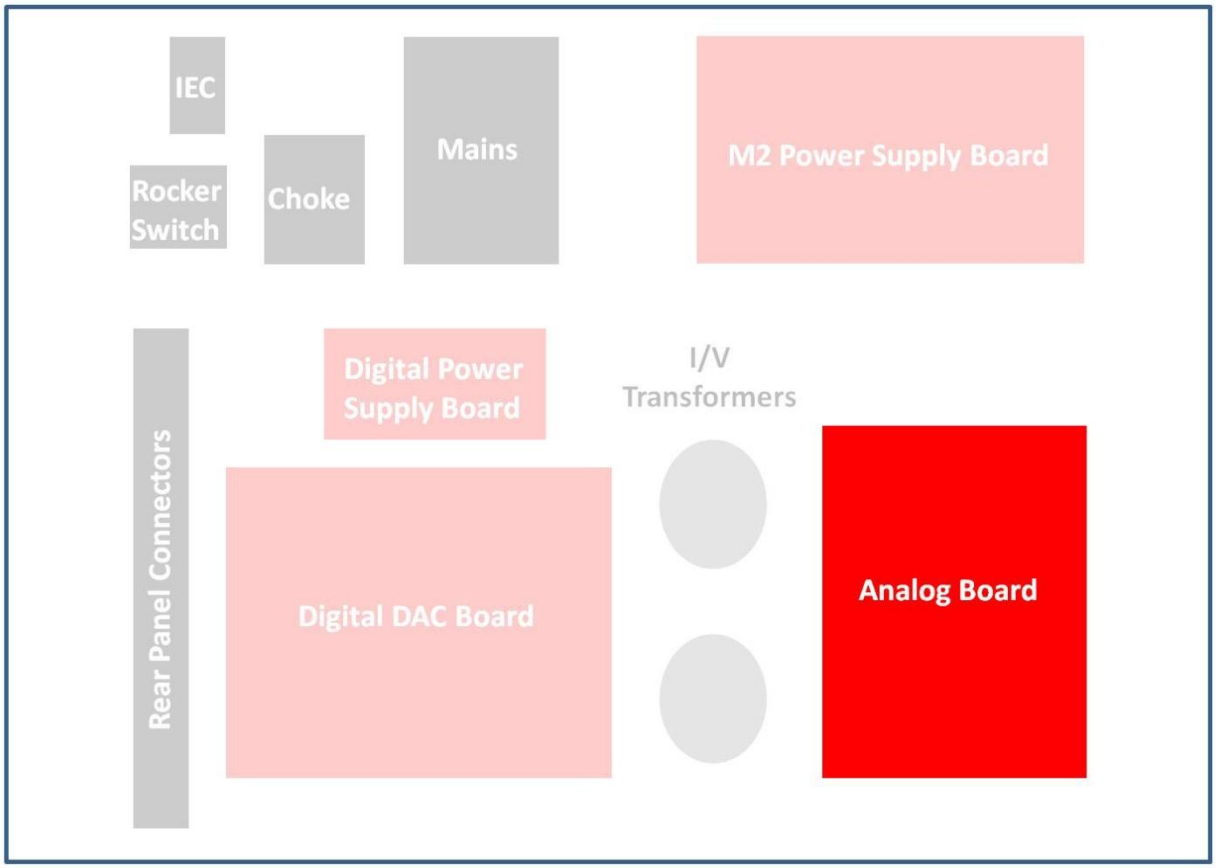

www.AudioNoteKits.com
audionotekits@rogers.com

Here's a close-up of the completed board:

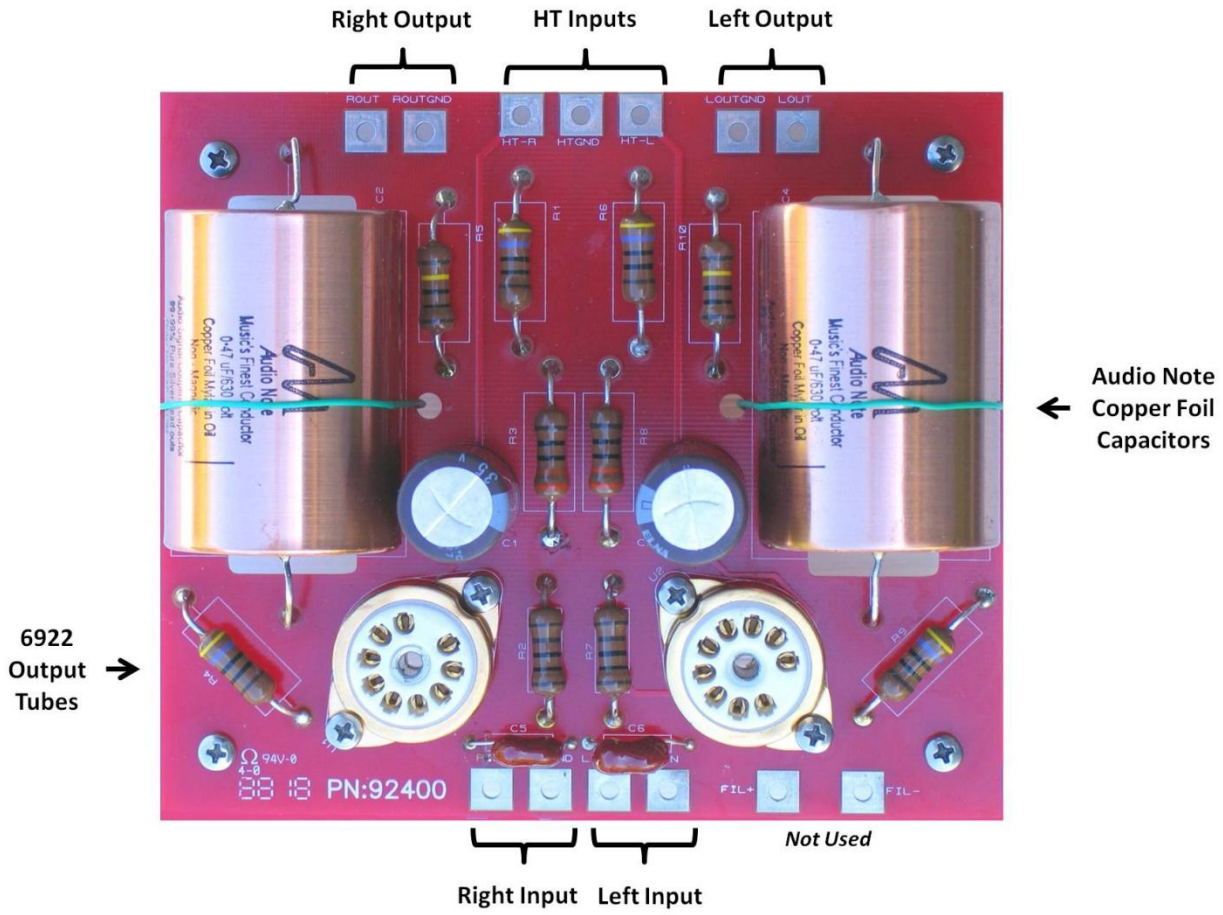

6.2 Installing the Valve Bases

☐ The first step is to install the 4 standoffs for the board itself.

Now gather the hardware required to install the standoffs for the valve bases from the Analog board hardware bag. The following picture shows all of the parts that are required for this step.

www.AudioNoteKits.com
audionotekits@rogers.com

Let's install the valve bases. This can be finicky; it looks easier than it is, so take your time.

- ☐ Take an M4 screw and insert it through the top of a valve base tab, then add a 6mm standoff underneath and tighten it just enough to make it snug against the tab.
- ☐ Do the same for the other tab.
- ☐ Insert the assembled valve base into position (it can only go one way). It may be a tight fit and you have to make sure that each leg fits into position — then slowly work the pins into position.
- ☐ Secure the screws to the underside of the board with the nuts. Don't overtighten them; they're a bit wobbly at first but will become snug once they're soldered.

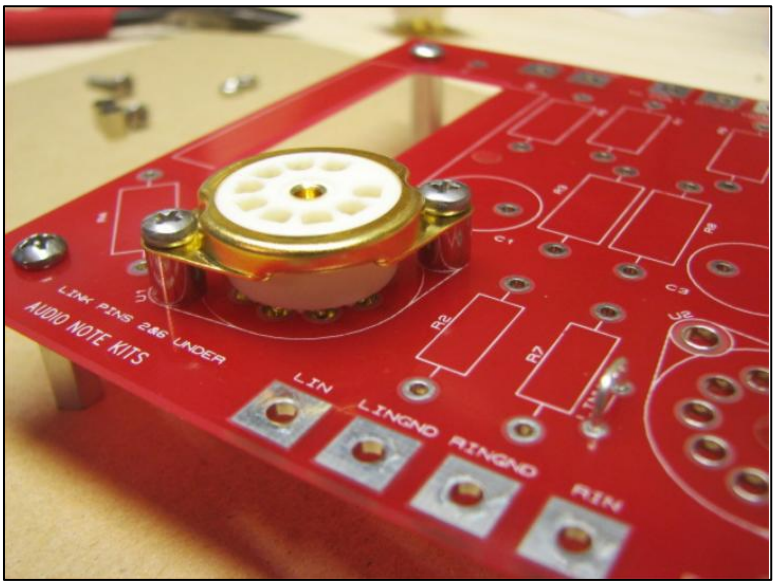

Here you can see how the valve bases are held in position.

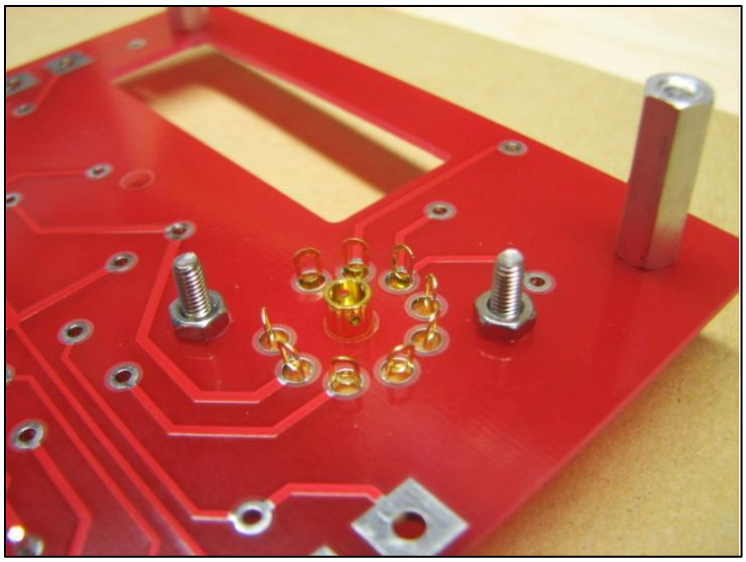

www.AudioNoteKits.com
audionotekits@rogers.com

☐ Solder the 9-pin valve base to the board.

➡ *As you can see in the schematic, pins 8 and 9 are connected (by a barely visible PCB connection); don't think you have a solder bridge and try to scrape it clean!*

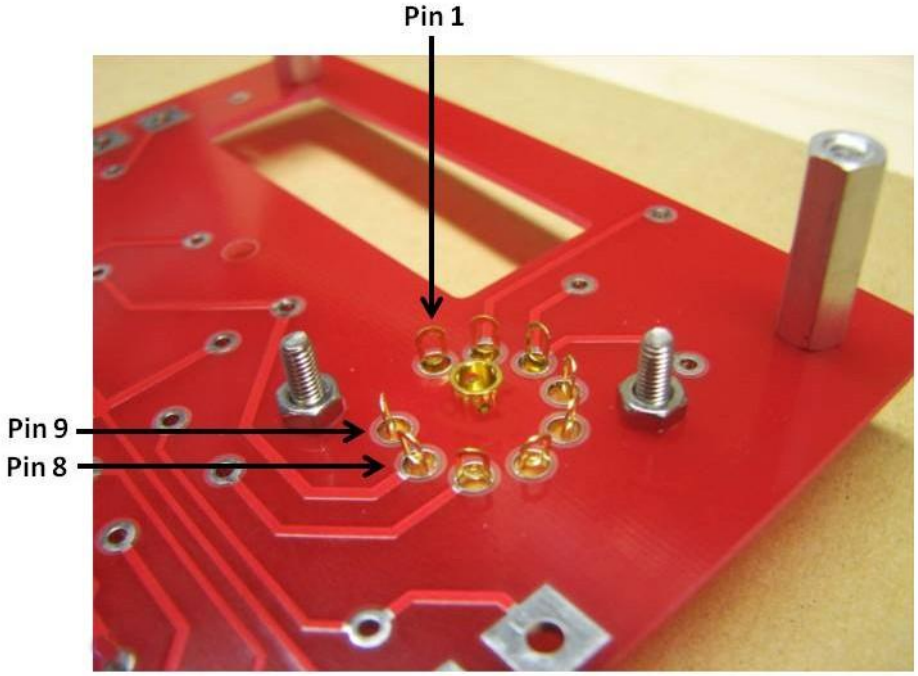

☐ Repeat the above steps for the other 9-pin valve base.

6.3 Installing the Resistors

We are now going to install the resistors.

Quantity	Part	Wattage	Designator
2	330R	1W	R3, R8
2	1K	1W	R2, R7
4	475R	1W	R1, R4, R6, R9
2	1M	1W	R10, R5

☐ Install the resistors into their correct positions. You can compare your installation with the picture below.

www.AudioNoteKits.com
audionotekits@rogers.com

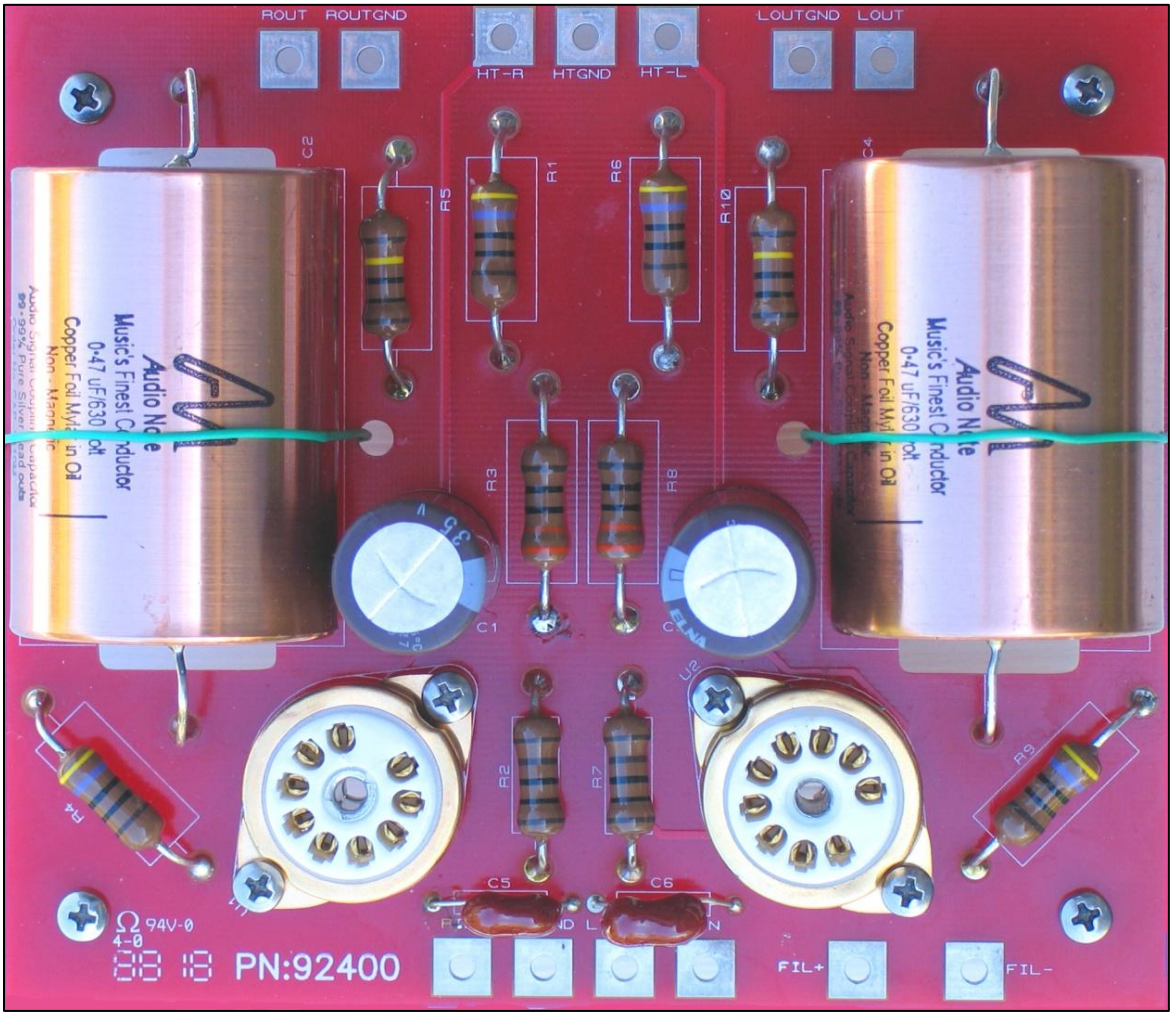

6.4 Installing the Capacitors

Now we'll install the capacitors.

Type	Quantity	Part	Designation
Electrolytic	2	470uf 16V (or greater)	C1, C3
Silver Mica	2	820pf	C5, C6
Copper Foil Mylar in Oil	2	Audio Note 47uf 630V	C2, C4

REMINDER

The electrolytic capacitor must be installed correctly way or they will blow up! The POSITIVE side is the one with the longer lead; the NEGATIVE side is the one with the shorter lead. The NEGATIVE side also has a stripe running down the side of it.

www.AudioNoteKits.com
audionotekits@rogers.com

☐ Install the 470uf 16V (or greater) electrolytic capacitors.

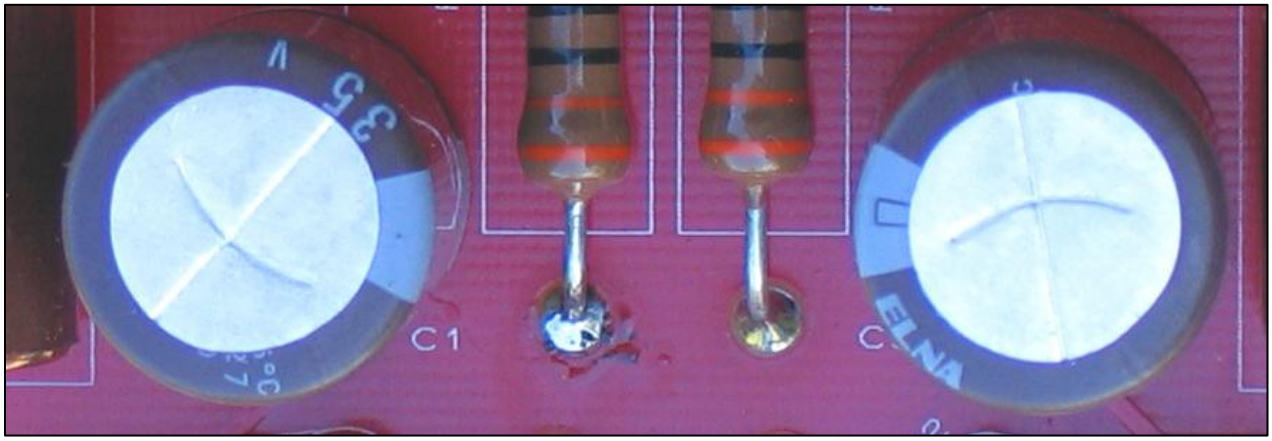

Here you can see that the two NEGATIVE sides face each other towards the center of the board. Double-check that you have them the correct way around before soldering in place.

☐ Install the two 820pf silver mica capacitors in C5 and C6. These can go either way.

☐ Install the large 0.47uf 630V Audio Note (UK) Copper Foil Mylar in Oil capacitors. These are film capacitors and their orientation is not critical. However we suggest that you position them as shown below with the Black bar is facing the side where the audio signal enters. That's the recommended orientation for these high end capacitors.

➡ *These capacitors are heavy. To reduce the strain on the soldered connections we recommend that you secure the capacitors using the hole provided in the board (and the outside of the board) with some extra wire, as in the picture below, or some cable ties. If you decide to use cable ties you'll need to be sure that they're slim enough (about 2.5mm) and long enough (about 8 inches) to get the job done. (See, for example, product CT259 at: https://www.cabletiesandmore.com/black-zip-ties-uv.)*

www.AudioNoteKits.com
audionotekits@rogers.com

Here's another picture of the completed Analog board:

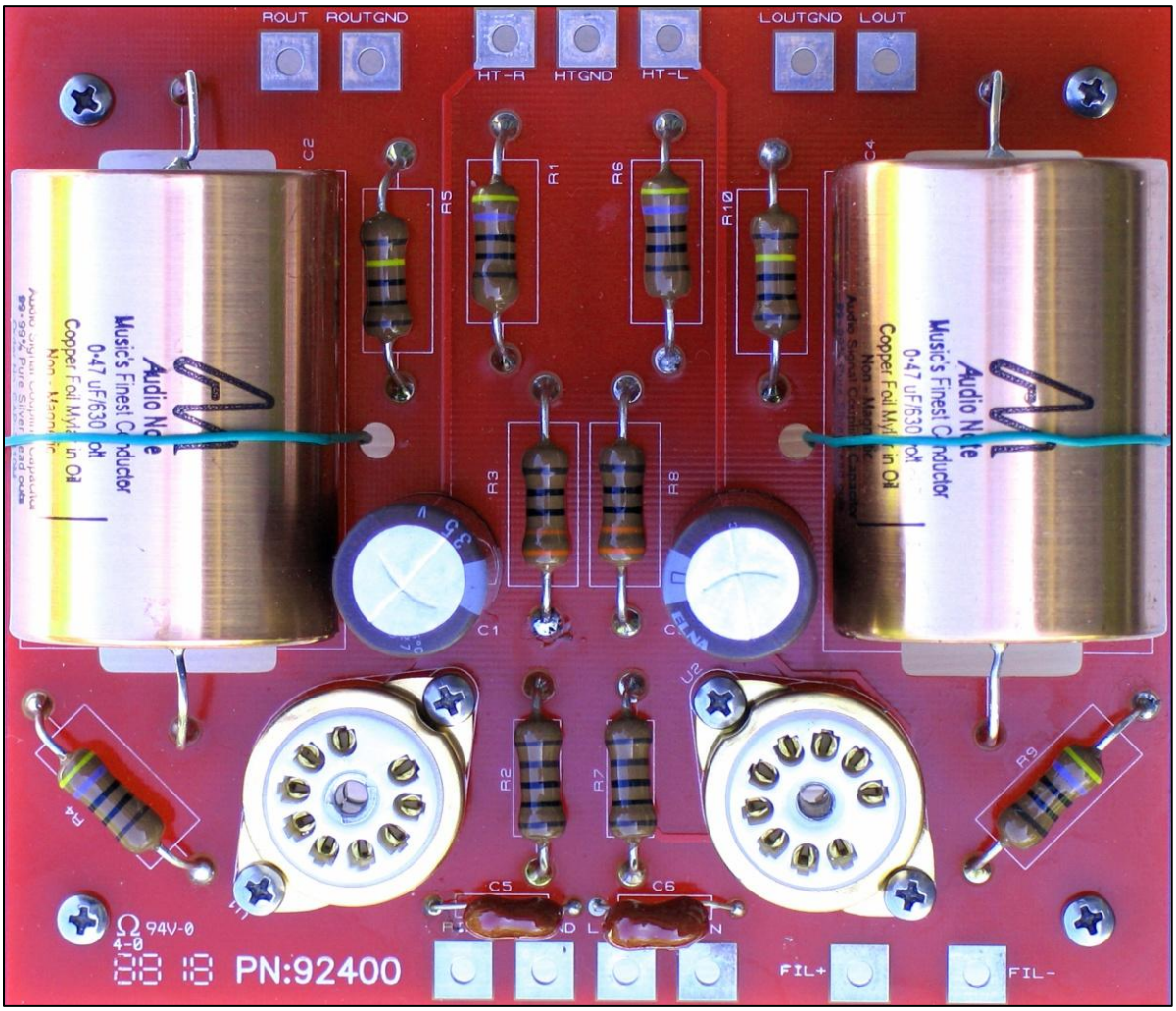

6.5 Final Checks

➡ *Pins 1, 4, and 5 on each valve base should have no connections made to them. These will be dealt with in the next section.*

Before proceeding, check over your board to make sure that your solder joints are good and that there are no accidental shorts of any kind.

www.AudioNoteKits.com
audionotekits@rogers.com

Section 7

Analog Board Filament and HT

In this section we'll connect up the Chassis Ground wire as well as the filament voltages and High Tension (HT) voltages from the M2 Power Supply board to the Analog board. Here's an overview of the connections:

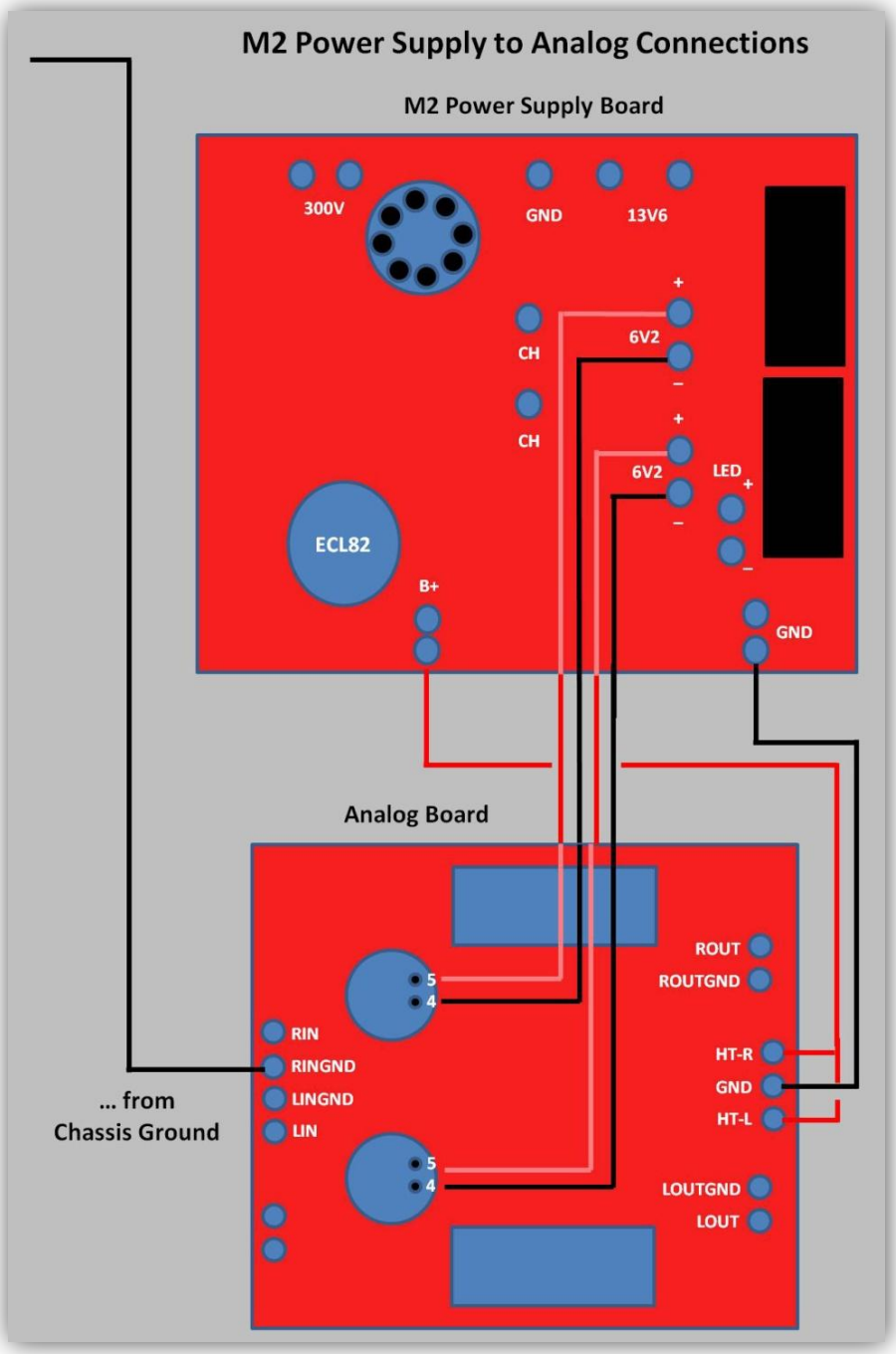

www.AudioNoteKits.com
audionotekits@rogers.com

The PCB has markings on it for FIL+ and FIL– but we will connect the filament wiring directly to the valve bases. FIL+ and FIL– are **not** connected to the pins of the valve bases.

Turn the board over.

- ☐ Let's begin by connecting the prepared wire from the Chassis Ground with the 10R resistor and capacitor to RINGND, from the underside. To keep things tidy, you can route this wire under the M2 Power Supply board.

Now look closely at the picture below. You'll see that there are 3 pins on each valve base that have nothing connected to them: pins 1, 4, and 5. Pins 4 and 5 are used for the filament wiring — which comes from the M2 Power Supply and which causes the tube to glow and operate correctly; Pin 1 is used for the HT or B+ coming from the M2 Power Supply; it's connected to either HT-L or HT-R on the top side of the board.

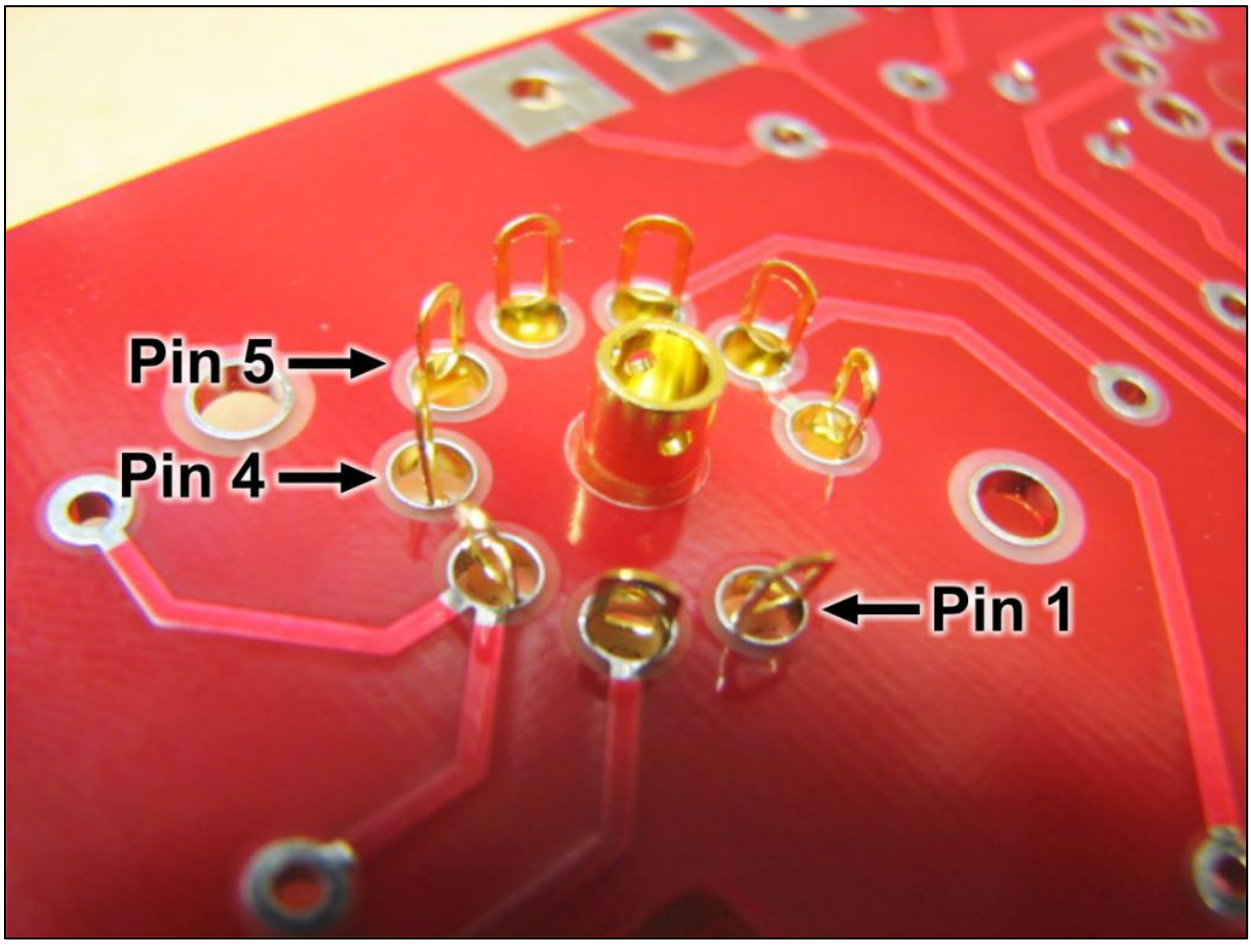

www.AudioNoteKits.com
audionotekits@rogers.com

7.1 Filament Wiring

- ☐ As you did when you attached wires to the Mains taps, tin the valve base pins and the wires to be attached; this will make things a lot easier.
- ☐ Take one pair of the twisted Red and Black wires from the 6V2 pads on the M2 Power Supply board and connect them to pins 4 and 5 of one of the 9-pin valve bases. It does not matter which base or which is + or –.
- ☐ Similarly, connect the other twisted Red and Black 6V2 wires to pins 4 and 5 of the other 9-pin valve base. Let's be consistent with respect to which color goes to which pin.

Each valve base will now have twisted Red and Black filament wires from the M2 Power Supply.

7.2 HT Wiring

- ☐ From the underside, connect the Green wire coming from the GND on the M2 Power Supply board near the LED to HT GND on the Analog board.
- ☐ Prepare both ends of a very short (about 1 inch) Red wire and connect one end to HT-L, from the top side.
- ☐ Connect the other end of this short Red wire (from the top side) and the Red wire coming from the B+ of the M2 Power Supply board (from the underside) to HT-R.

Secure the Analog board to the chassis, as shown below:

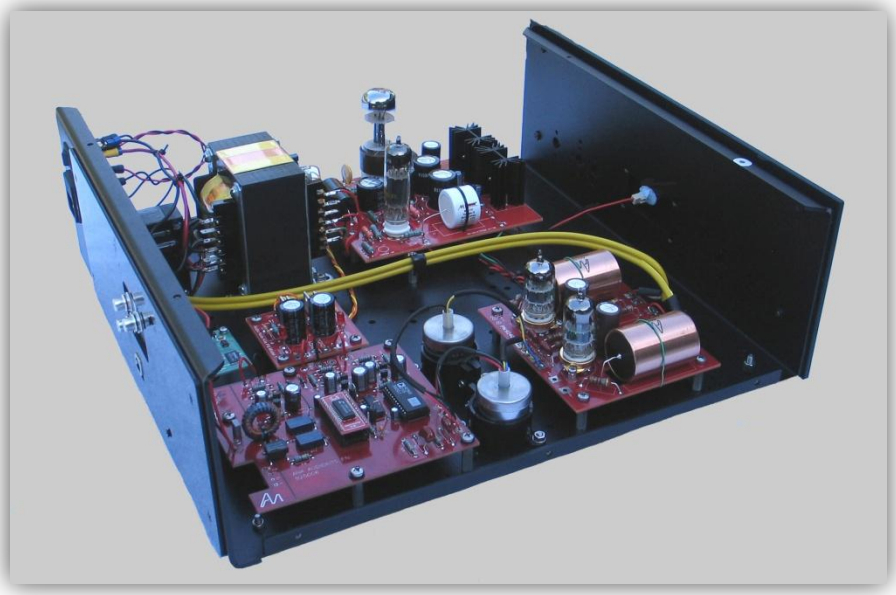

That's it for this section!

www.AudioNoteKits.com
audionotekits@rogers.com

Section 8

Installing the Digital DAC Board

8.1 Overview

In this section we'll be installing the Digital DAC board.

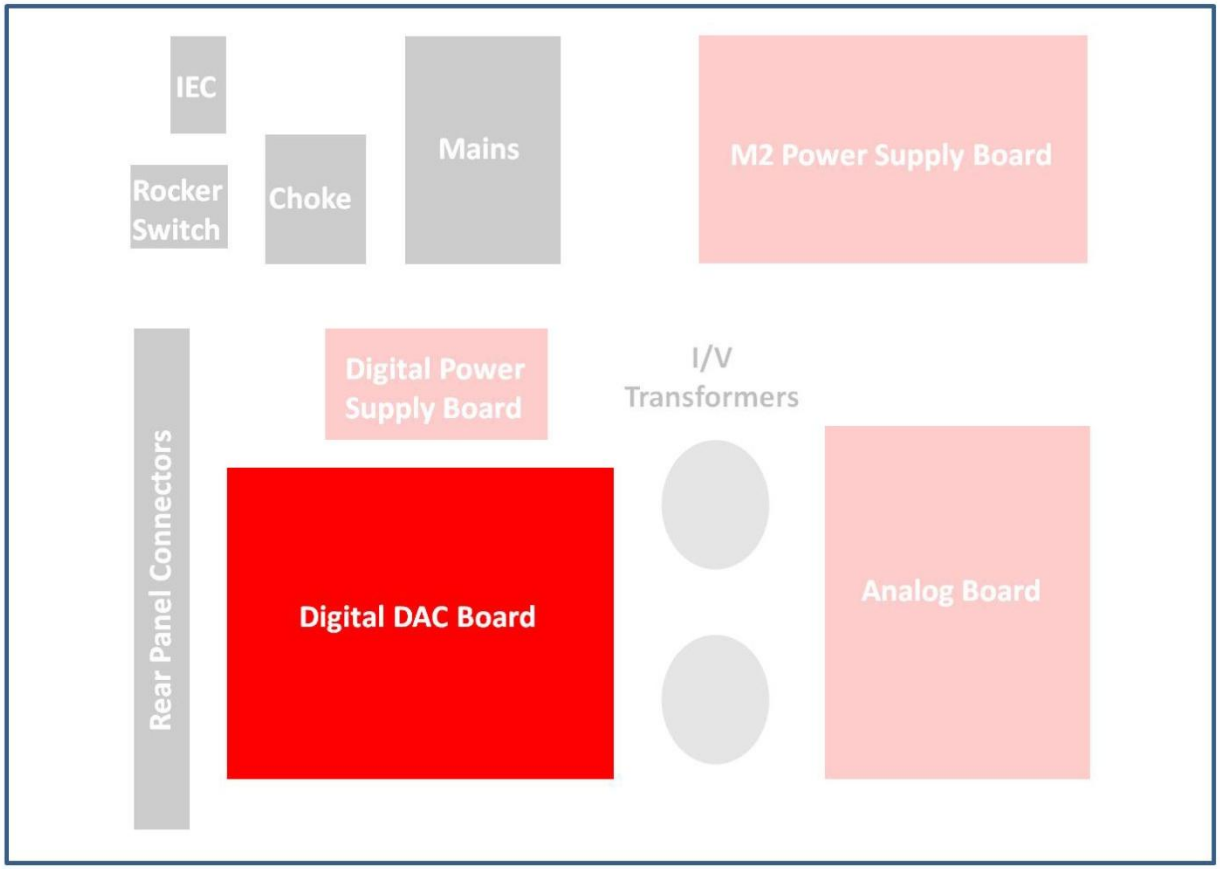

The DAC 2.1 Signature Digital DAC board has been preassembled and tested, and it is almost ready to be installed in the chassis. The Signature Digital DAC board includes high quality Elna capacitors without any digital or analog filtering — giving it its highly praised Audio Note (UK) sound.

www.AudioNoteKits.com
audionotekits@rogers.com

It's surely helpful to go over how the digital signal is routed to and from this board. Have a look at the picture below as you follow along:

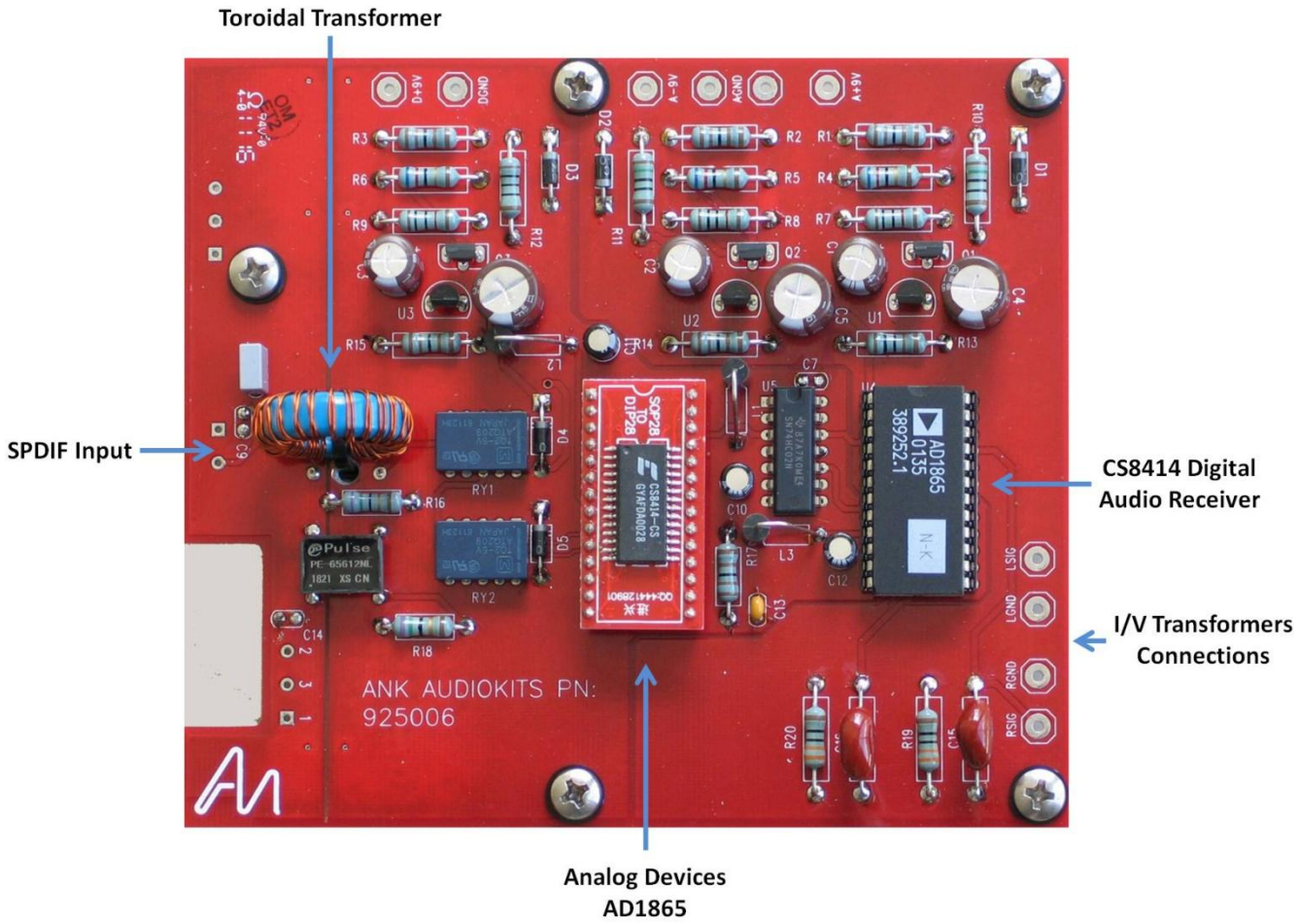

The Digital DAC board takes the input (digital) signal from a device like a transport, CD player, or computer and converts it into an analog signal which represents the music and can be amplified by the analog output stage in our DAC 2.1 Signature.

There are three available options (any two of which can be configure at any one time) for how the digital signal is input. Let's assume, for the moment, that the input is S/PDIF, which is a standard for digital music: it's an acronym for the Sony/Philips Digital Interface Format.

The S/PDIF signal enters via a toroidal input transformer. This is done for protection and to ensure a high quality signal gets delivered to the board. From the toroidal transformer it enters the 96kHz CS8414 Digital Audio Receiver chip which recovers the clock and synchronization signals, and de-multiplexes the audio and digital data, outputting a pure digital 1's & 0's format. This data then enters the Analog Devices AD1865N-K (the highest selection grade), which is a complete, dual 18-bit DAC resistor ladder chip featuring a 110 dB signal-to-noise ratio for low noise operation. This chip outputs a current source representing the analog waveform. This current passes to the I/V transformers in the next stage and the

www.AudioNoteKits.com
audionotekits@rogers.com

high quality 330R Audio Note (UK) tantalum resistors on the output board creating the output audio signal voltage.

Now, before we install the board, let's make a couple of connections which will make things a little easier later on. Have look at the following diagram:

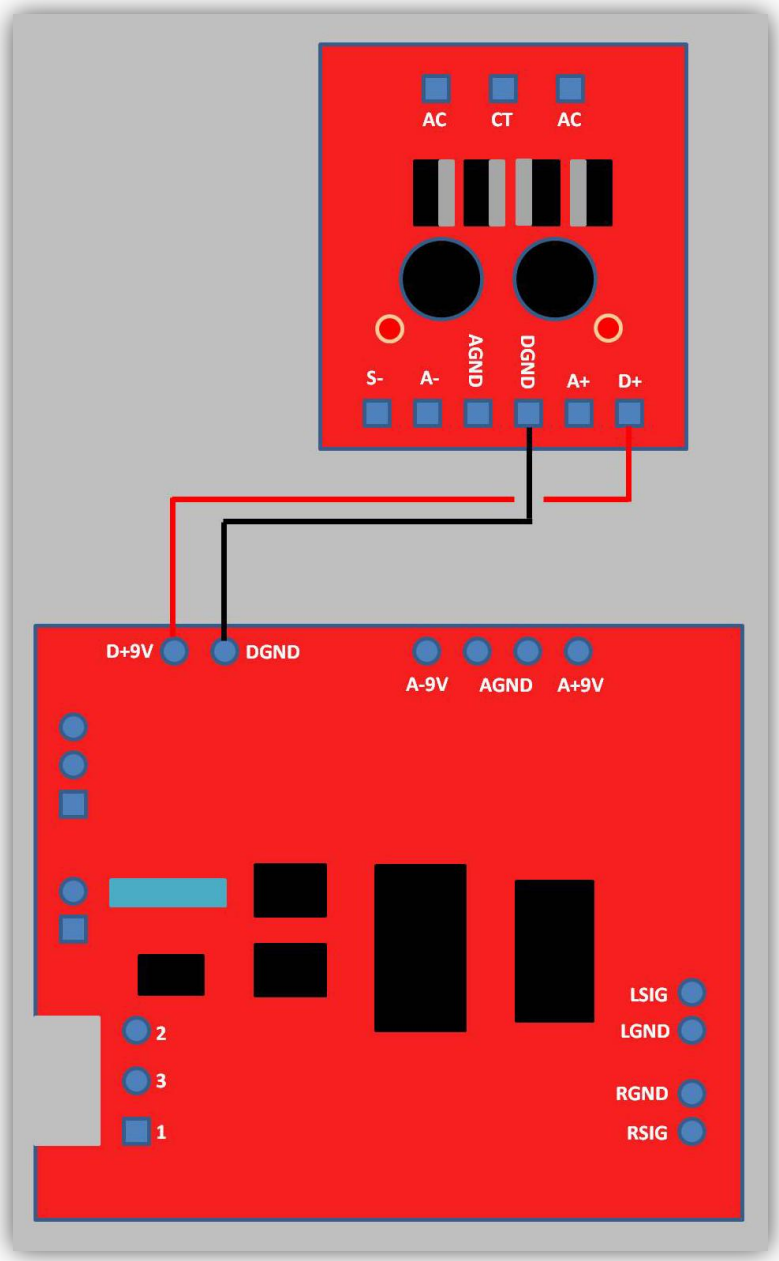

- ☐ Prepare and connect the Black wire coming from DGND on the Digital Power Supply board to DGND on the Digital DAC board, from the underside of the board.
- ☐ Similarly, prepare and connect the Red wire coming from D+ on the Digital Power Supply board to D+9V on the Digital DAC board, from the underside of the board.

www.AudioNoteKits.com
audionotekits@rogers.com

8.2 Installation

The Digital DAC board was originally designed to support 75 ohm RCA input (CON1) and XLR 110 ohm (CON2). These days we have a USB option as a third choice, one which a number of customers prefer. The board allows you to use any two of the three inputs and you can switch between them. Most customers choose to use either the coaxial RCA or XLR on the CON1 channel and USB on the CON2 channel, which is the way we've setup the build for this manual. The switch on the back of the chassis allows you to select between CON1 and CON2.

➡ *The Digital DAC board includes the AN Toroidal input transformer and we custom install this on the channel (RCA or XLR) that you selected when you ordered the kit.*

☐ Install the board as shown below, using five M4 screws from the underside of the chassis. Be sure to screw the standoff closest to the back of the chassis into the prepared **unpainted** ground hole.

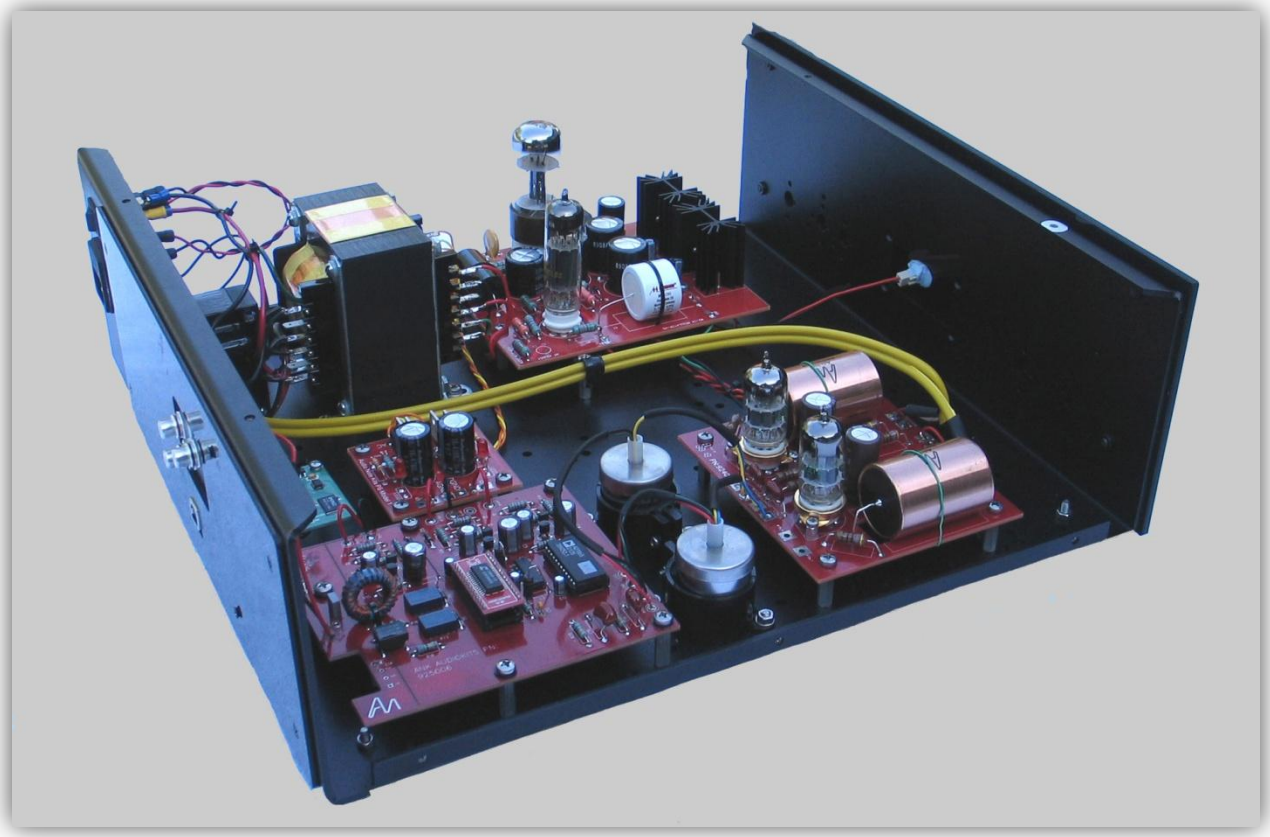

www.AudioNoteKits.com
audionotekits@rogers.com

Section 9

Finishing the Interwiring of the Digital DAC Board

We've already partially completed the interwiring of the Digital DAC board. Let's finish the job!

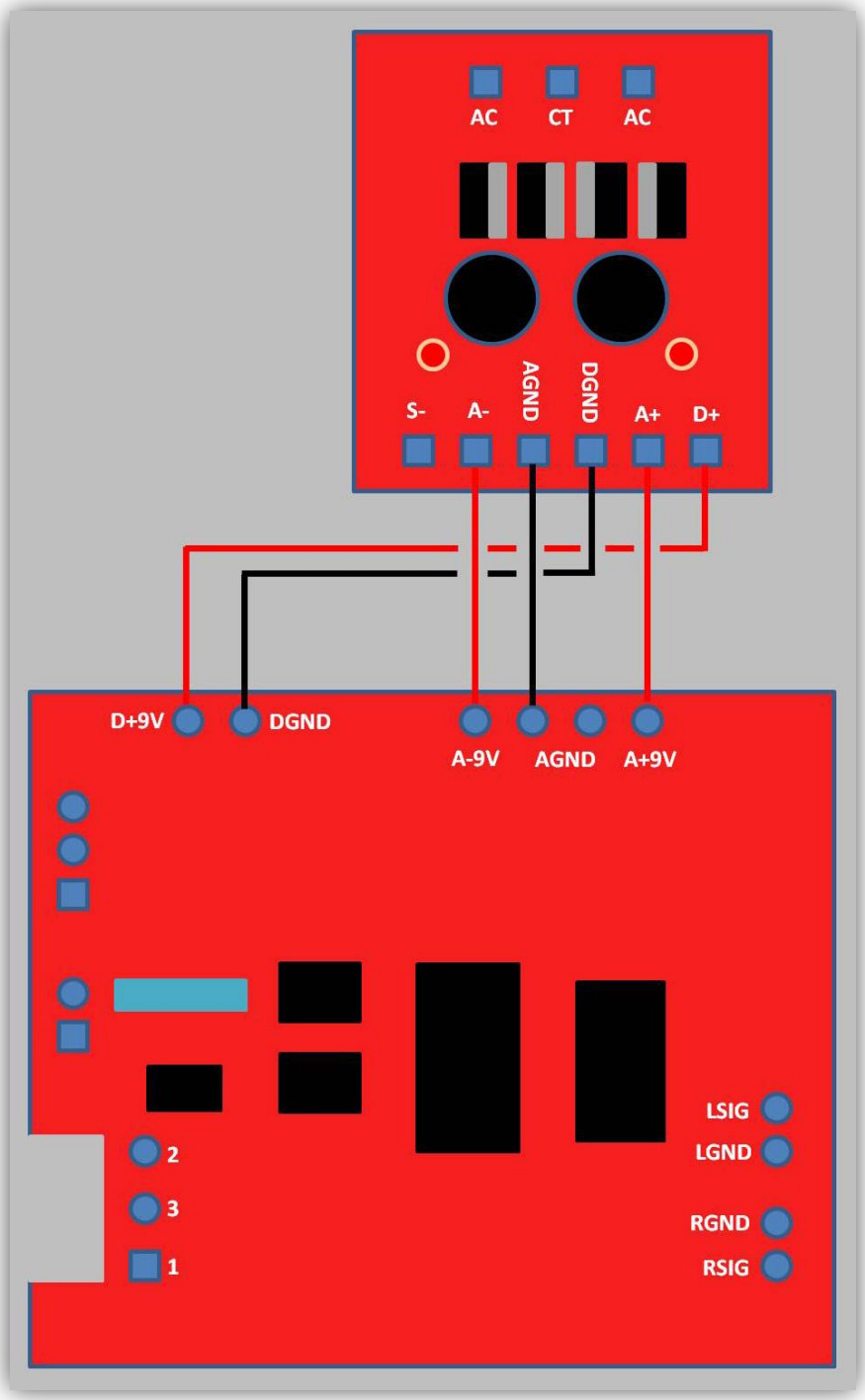

www.AudioNoteKits.com
audionotekits@rogers.com

- ☐ Connect a Black wire from AGND on the Digital Power Supply board to either AGND solder tab on the Digital DAC board.
- ☐ Connect a Red wire from A+ on the Digital Power Supply board to A+9V on the Digital DAC board.
- ☐ Connect a Red wire from A– on the Digital Power Supply board to A–9V on the Digital DAC board.

Here's a picture of the completed interwiring. (If you look carefully you can see the wiring from DGND to DGND and D+ to D+9V that we did earlier.)

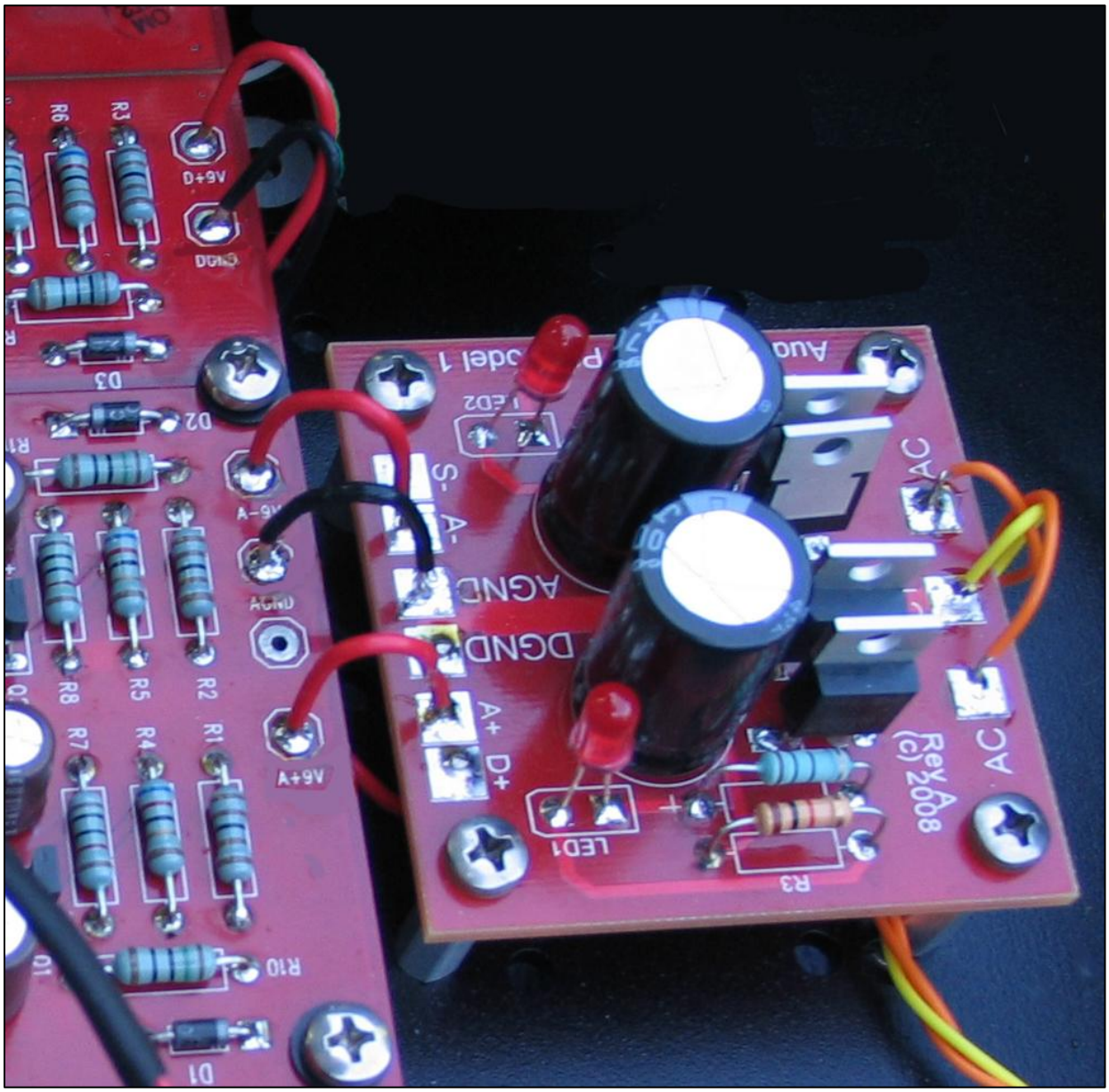

That's it!

www.AudioNoteKits.com
audionotekits@rogers.com

Section 10

Installing the I/V Transformers

10.1 Overview

In this section we'll install the I/V transformers into the DAC. These I/V transformers were specially designed by Audio Note (UK) engineering to provide an affordable yet highly effective transformer for the DAC 2.1. I/V Transformers are used to maximize the energy transfer during the Current-to-Voltage phase of the conversion, resulting in increased dynamics.

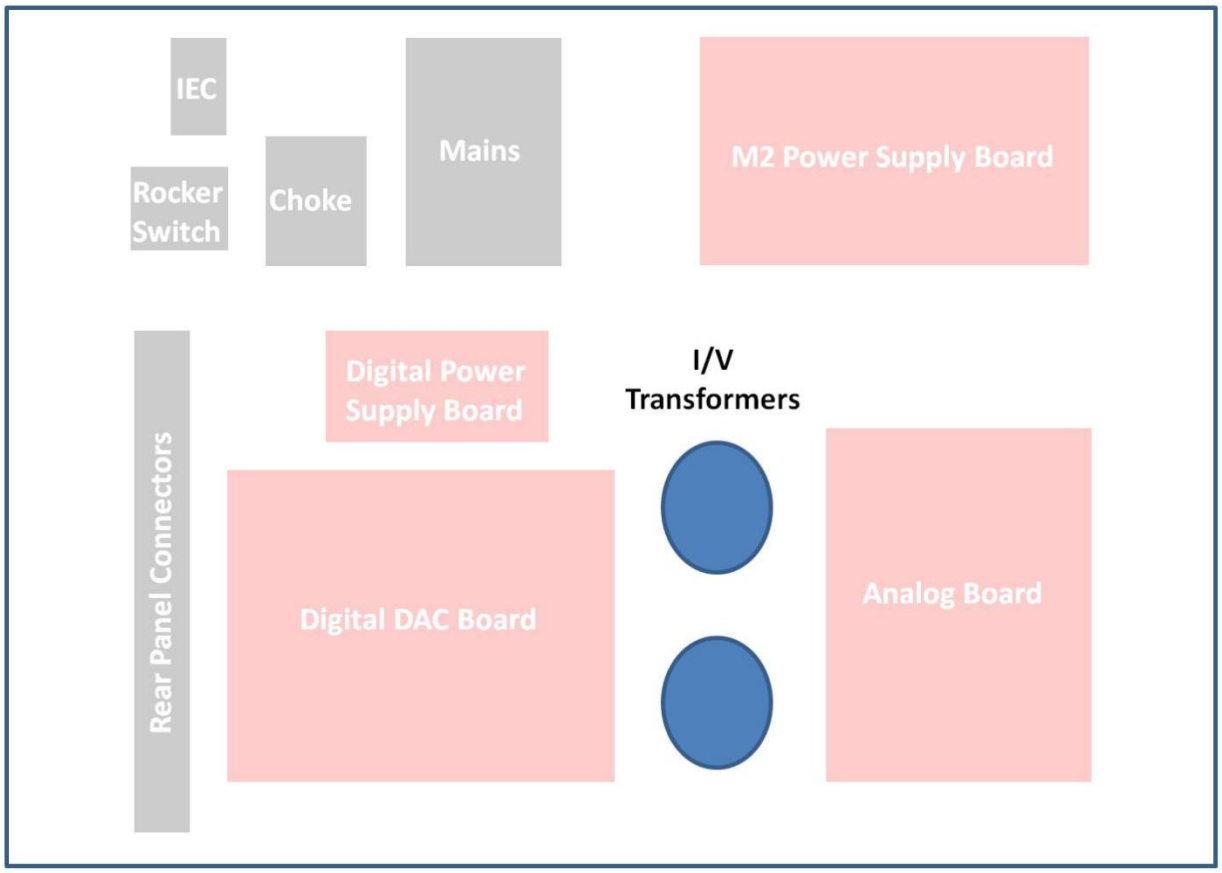

www.AudioNoteKits.com
audionotekits@rogers.com

You will have the following parts in your I/V transformer kit bag:

Quantity	Description
2	I/V Transformers in Mu Metal Case
4	M4 PAN Head Screws, Washers, and Nuts

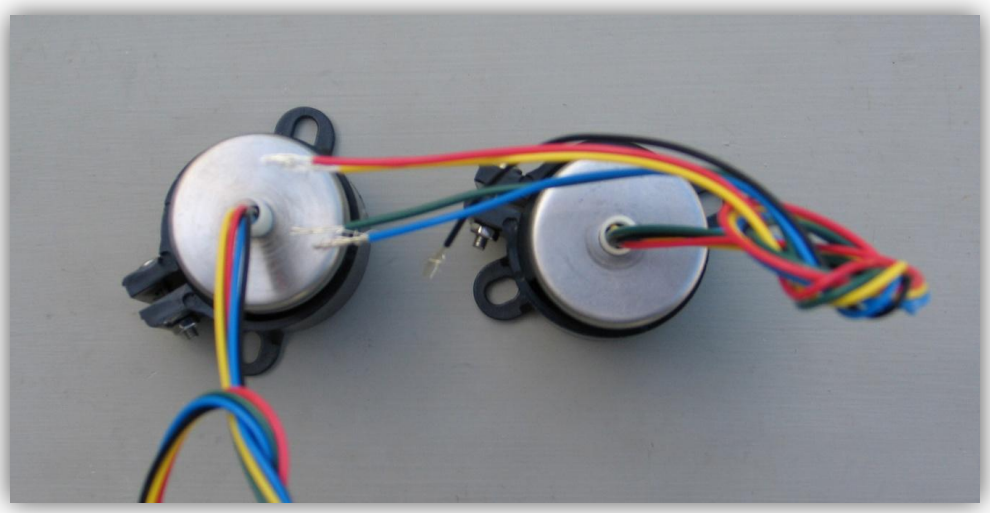

10.2 Installing the I/V Transformers

☐ Mount the two I/V transformers in the chassis on the diagonal, as shown below:

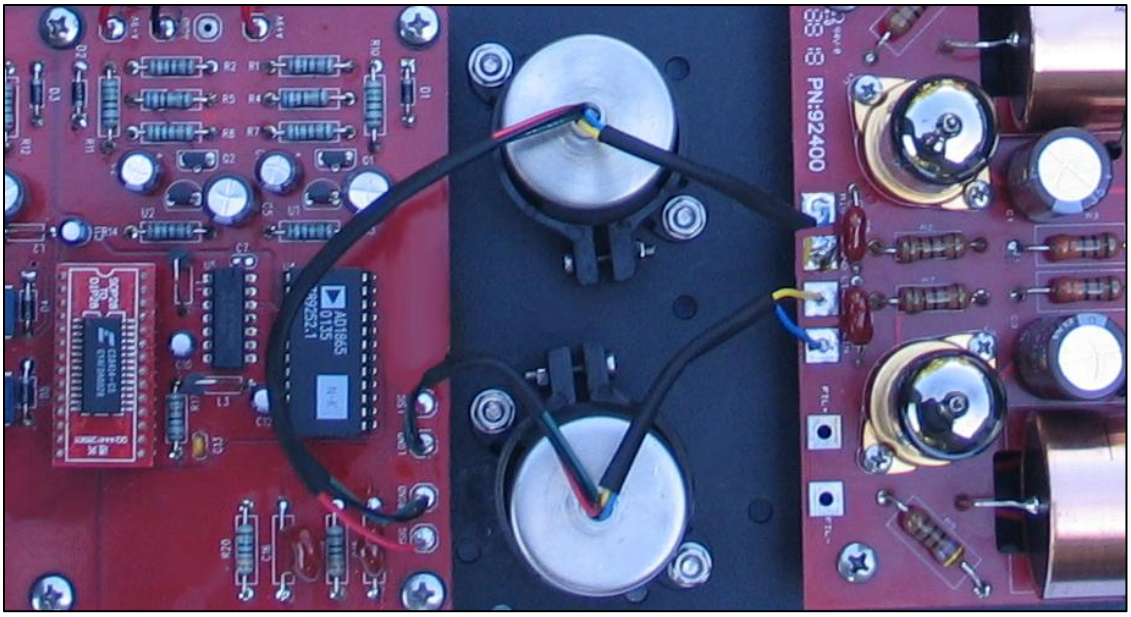

www.AudioNoteKits.com
audionotekits@rogers.com

10.3 Wiring the I/V Transformers

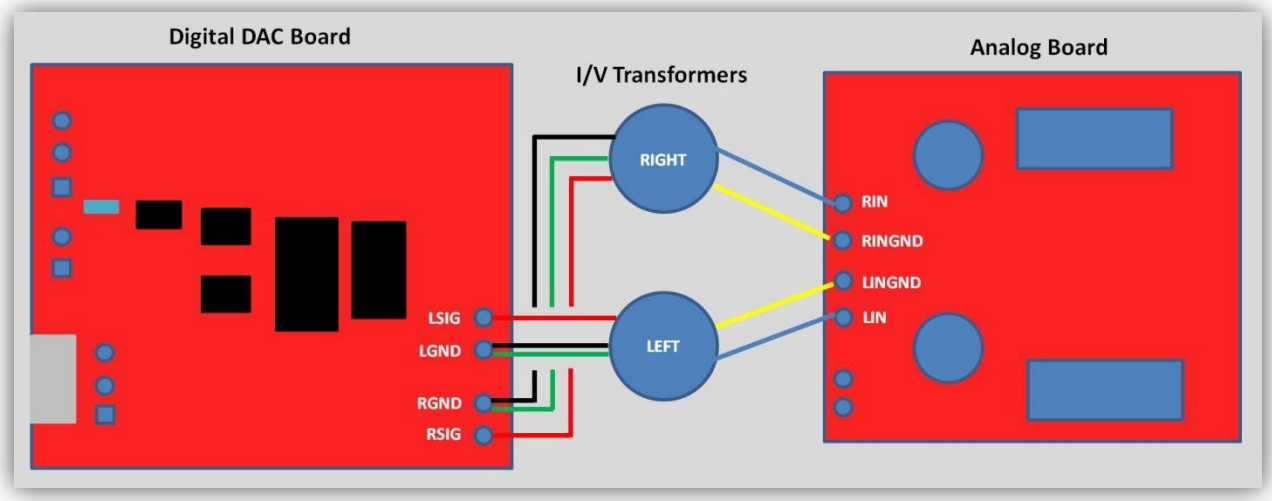

The I/V Interwiring is straightforward enough, but as you can see above, the Left and Right solder tabs positioning on the PCBs is inverted on the two boards. So take your time and double check everything. Also, if you'd like, you can use some heatshrink to keep things tidy. This will need to be carefully measured beforehand. Don't make the heatshrink too long as it will reduce the flexibility needed to make the connections.

- ☐ Connect the Red lead from the Left I/V transformer to the LSIG on the Digital DAC board.
- ☐ Connect the Black and Green leads from the Left I/V transformer to the LGND on the Digital DAC board.
- ☐ Connect the Red lead from the Right I/V transformer to the RSIG on the Digital DAC board.
- ☐ Connect the Black and Green leads from the Right I/V transformer to the RGND on the Digital DAC board.

Now that we've wired the interface between the I/Vs and the Digital DAC board side we now need to do a similar thing to the Analog board.

- ☐ Connect the two Blue wires coming from the Left and Right I/V transformer to LIN and RIN respectively.
- ☐ Connect the two Yellow wires coming from the Left and Right I/V transformer to LINGND and RINGND respectively.

www.AudioNoteKits.com
audionotekits@rogers.com

Here's what we looking for:

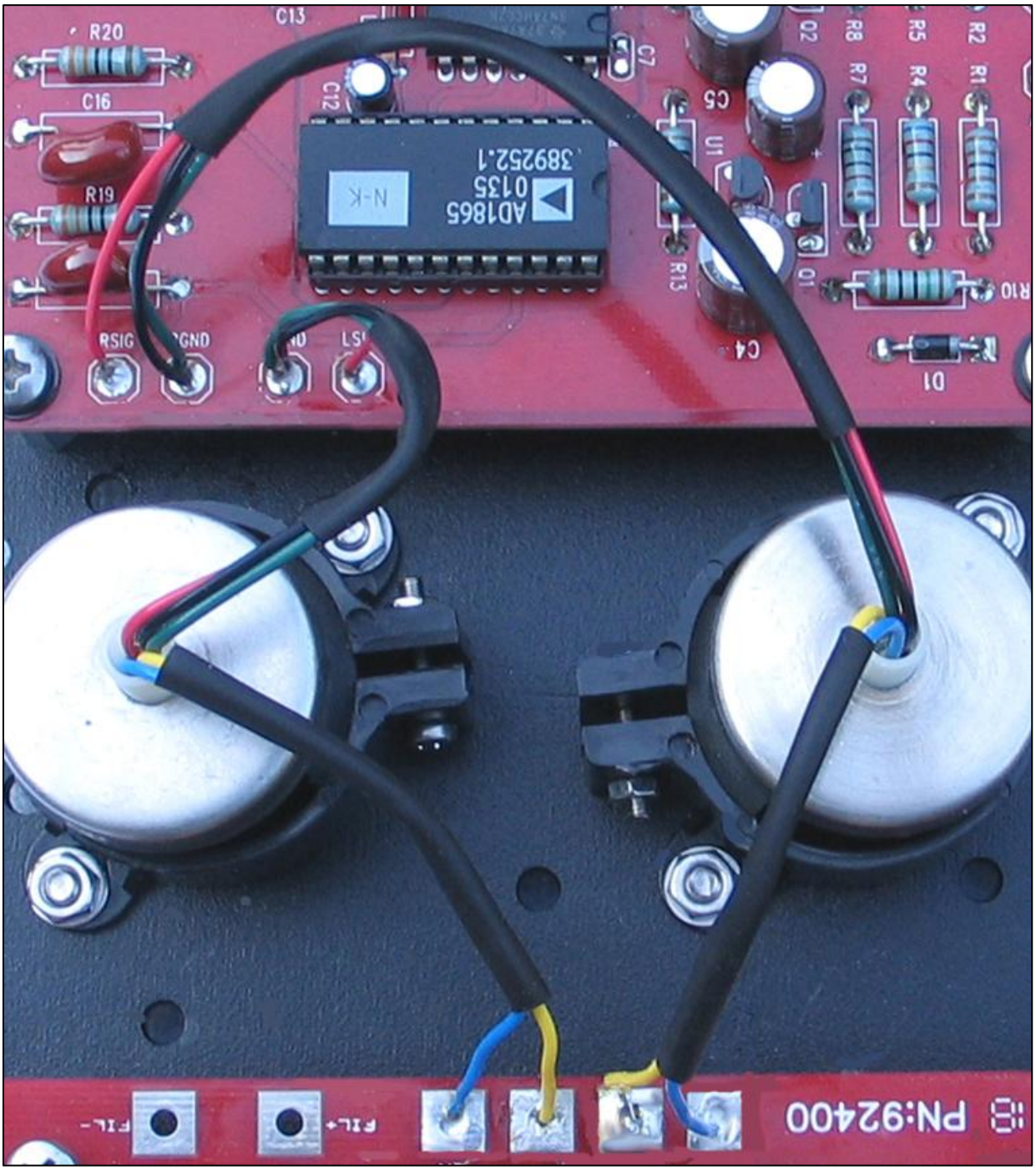

www.AudioNoteKits.com
audionotekits@rogers.com

Section 11

Installing the Rear Faceplate and Connectors

11.1 Overview

In this section we'll install the rear faceplate, the selector switch, and the various digital and analog connectors.

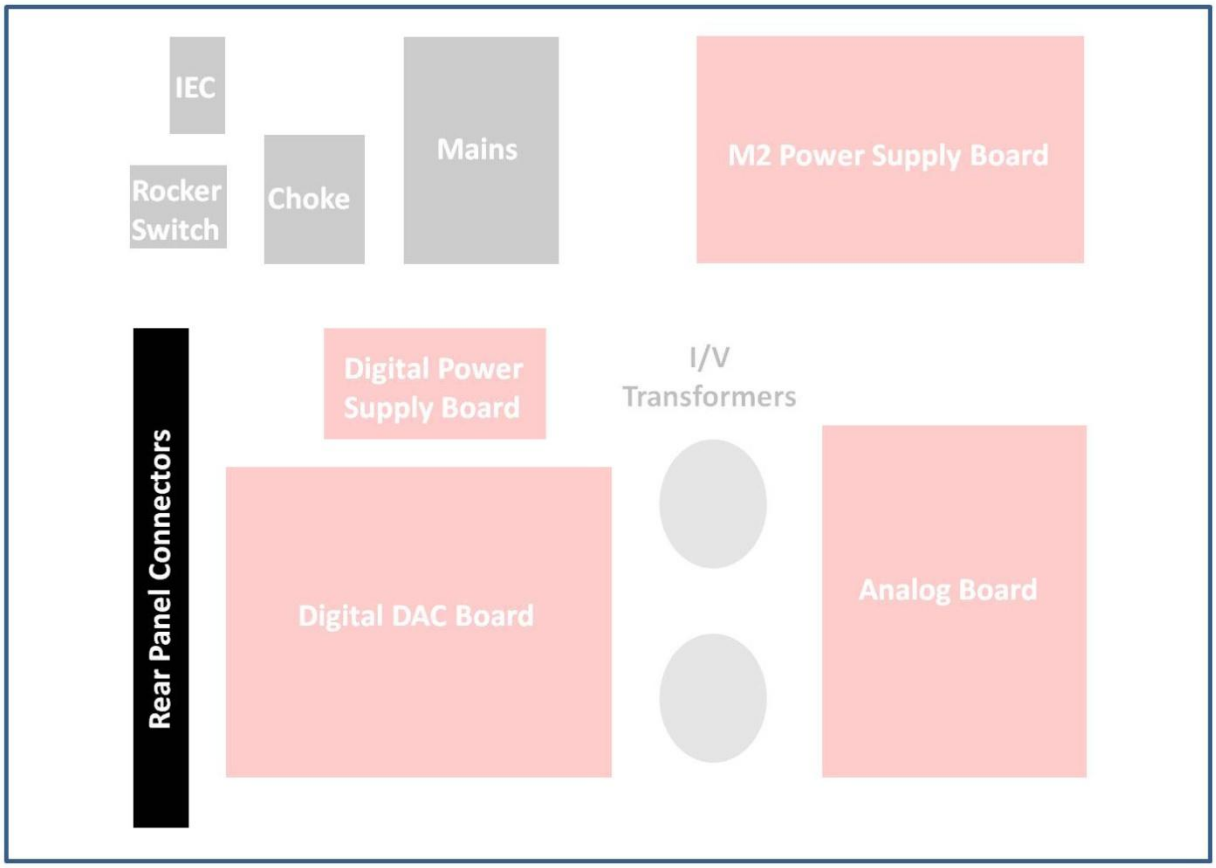

www.AudioNoteKits.com
audionotekits@rogers.com

11.2 Installing the Rear Faceplate

- ☐ Remove the protective films from the front and back of the rear faceplate.
- ☐ Install the rear faceplate using the six Black M3 CSK flat head screws, as shown below.

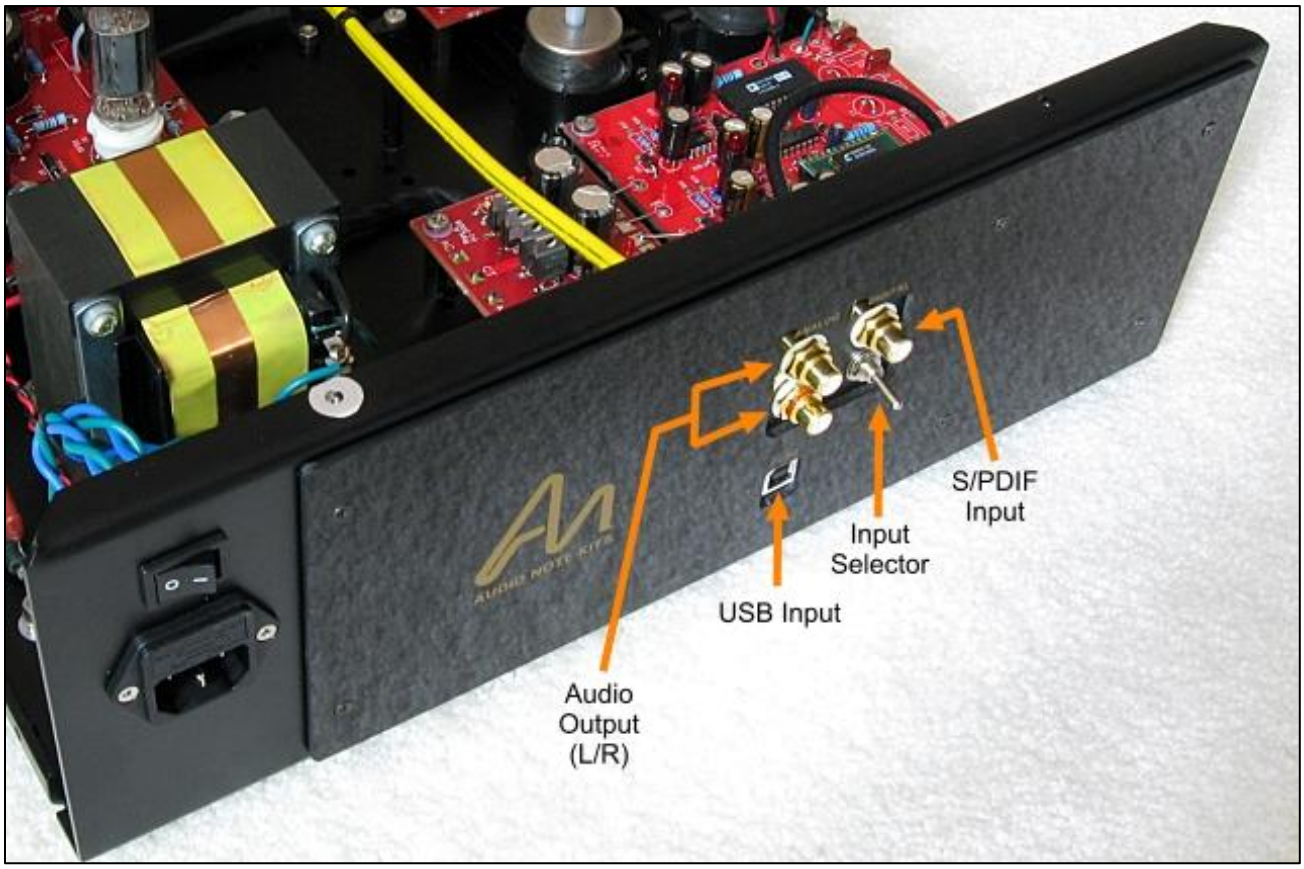

www.AudioNoteKits.com
audionotekits@rogers.com

11.3 Installing the Input Selector Switch

The DAC 2.1 Digital DAC board has two inputs on it: CON1 and CON2. Based on customer preferences the kit usually ships with one RCA input connector and the optional USB board with its integral USB connector. Alternatively, it may be ordered with an XLR input connector. Any two of these three inputs (RCA, USB, or XLR) can be made active and switched between using the Input Selector switch. If you wish to do so at a later time, you can reconfigure your DAC to support a different combination of inputs. This manual discusses all three inputs and provides their respective wiring diagrams, but only the RCA and USB inputs are pictured.

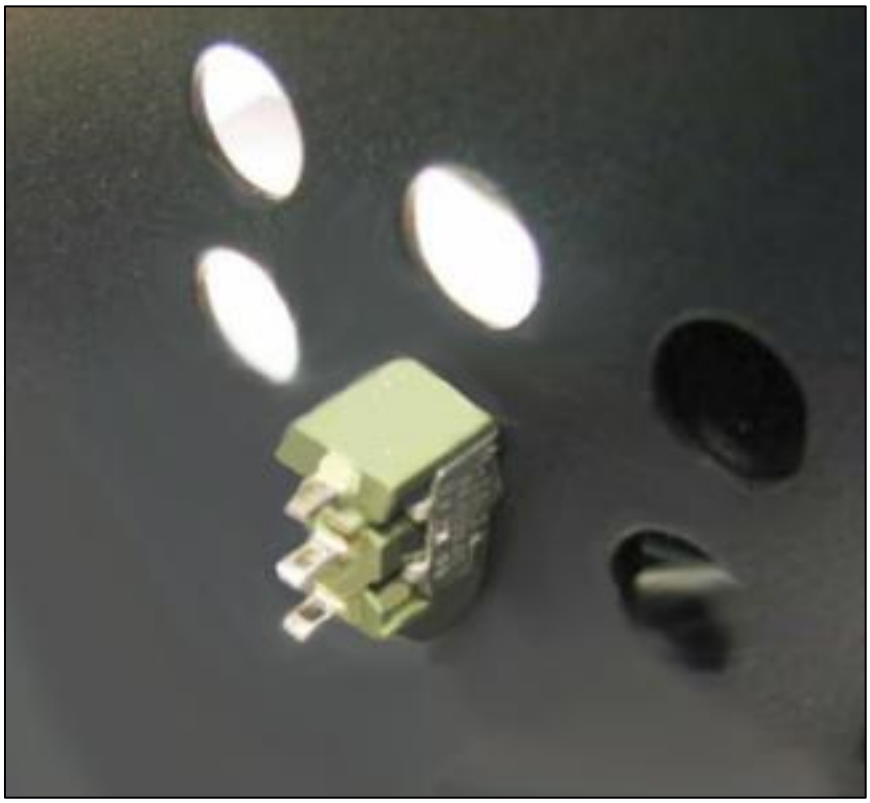

- ☐ Install the toggle switch as shown above at the back of the chassis in the bottom left corner position.

www.AudioNoteKits.com
audionotekits@rogers.com

11.4 Installing the Other Connectors

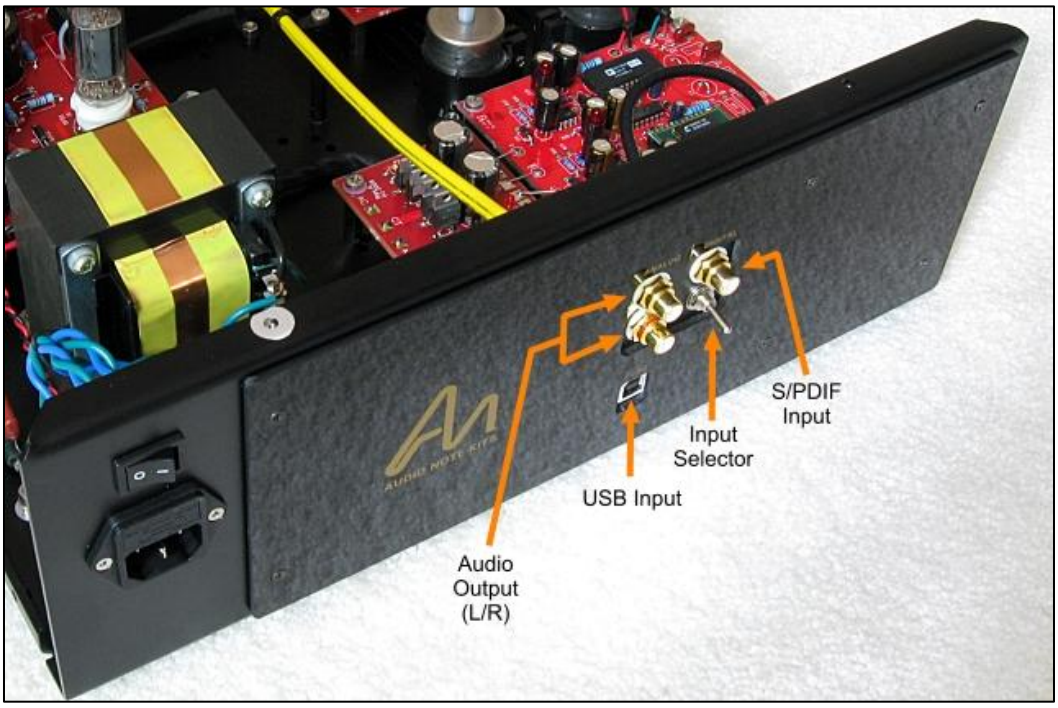

☐ Next, we'll install the three RCA jacks. For the analog outputs, let's put the Red on top and the Black on the bottom, as shown. For each jack, use the following steps:

Insert into the chassis from the outside:

- ❖ The white insulating washer with the raised ring facing inwards into the hole
- ❖ The RCA jack

Attach, from the inside of the chassis, onto the protruding jack:

- ❖ The other white insulating washer
- ❖ The ground lug
- ❖ The nut (don't immediately tighten this more than one or two turns

☐ Bend each ground lug up about 30 degrees and position at about 2 o'clock. *Make sure they are away from the chassis.*

☐ Tighten the jacks *such that the inner lug is facing up/open*; it'll make soldering much easier in that position.

Make sure everything is snug and well tightened. We'll wire the jacks shortly.

www.AudioNoteKits.com
audionotekits@rogers.com

Now we'll install the USB board.

Over time we have sourced several different USB boards and it could be, alas, that there are no holes in the bottom of the chassis that match the positions of the two standoffs. If that's so, you will need to drill two holes in the chassis (it's aluminum, so it shouldn't be too difficult) to be able to mount the USB board in such a way that the connector is aligned with the USB slot on the back of the chassis.

- ☐ Install the USB board, align the connector in the back of the chassis as shown, and attach with 2 M3 screws into the standoffs from the underside of the chassis.

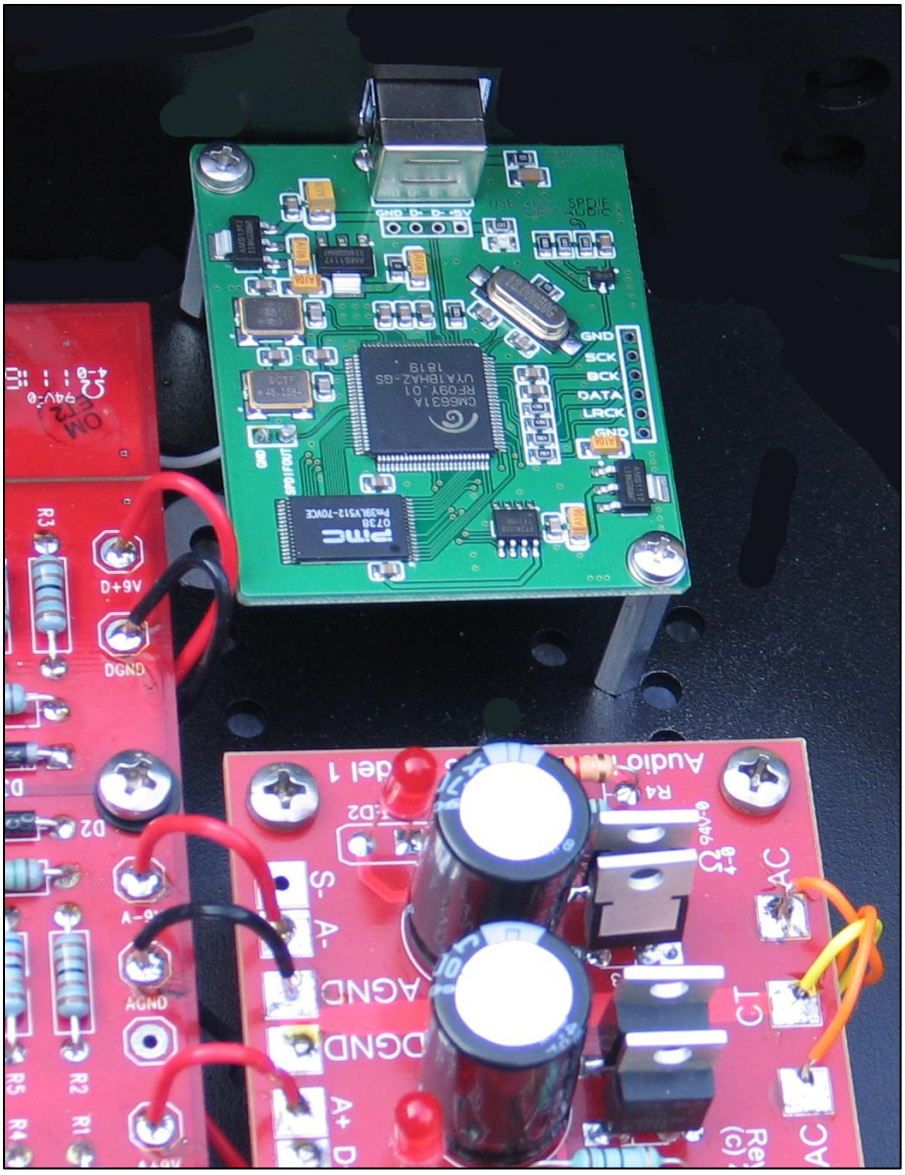

www.AudioNoteKits.com
audionotekits@rogers.com

11.5 Input Connections

Now, let's connect the Input Selector switch. We'll hook up 3 wires to the 3 positions on the Digital DAC board and wire them to the switch, as shown in the following graphic:

The colors of the wires do not matter, nor does which wire is at the top or bottom of the switch. Be sure to wire the middle lug of the switch to the middle solder tab as shown, and the other two wires as you please.

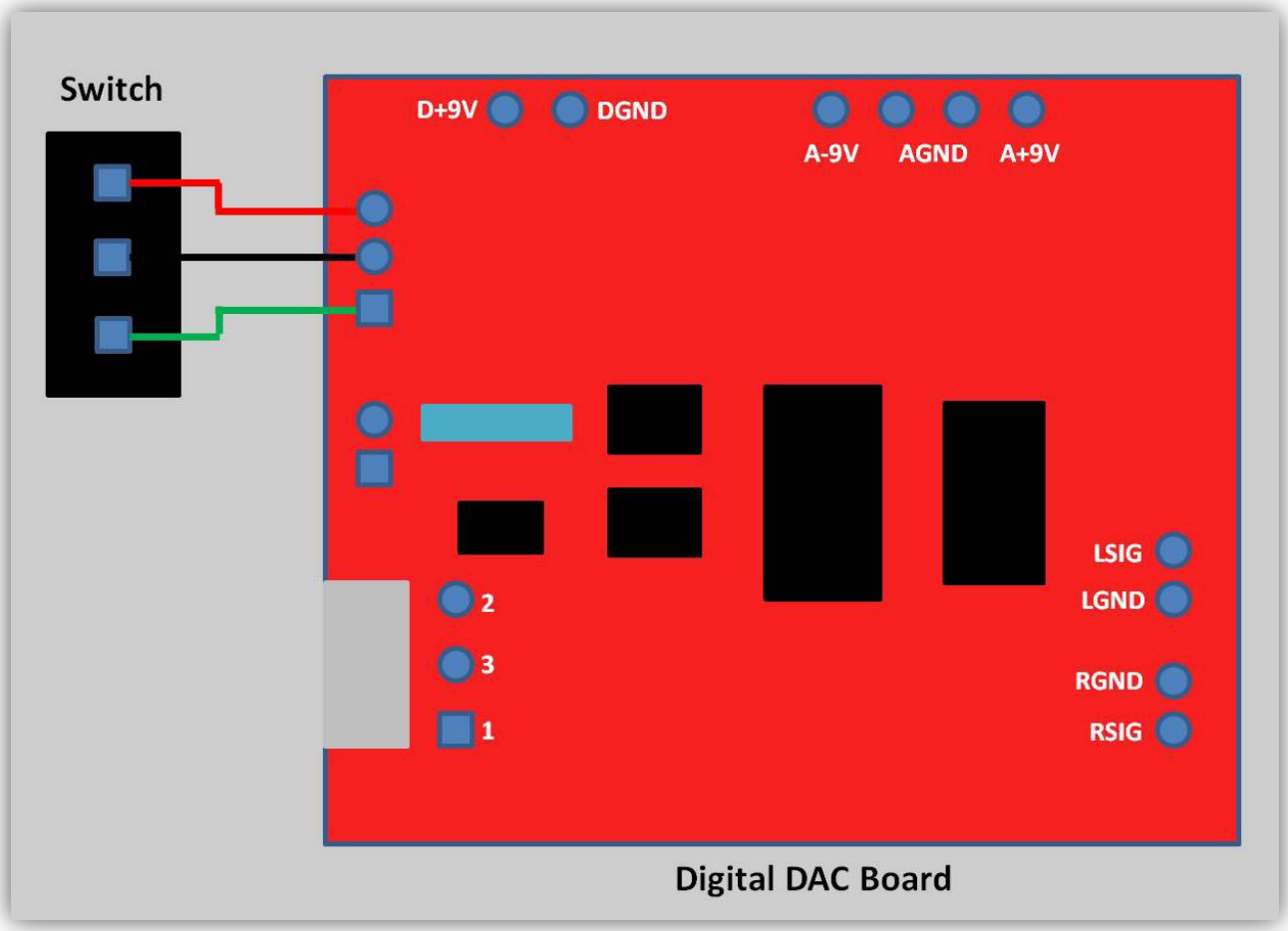

☐ Connect the 3 wires from the pins on the back of the Input Selector switch to their respective positions on the Digital DAC board. This will now allow us to toggle between the CON1 input and the CON2 input.

www.AudioNoteKits.com
audionotekits@rogers.com

11.5.1 Connecting the S/PDIF (RCA) Input

To connect the S/PDIF (RCA) input we will use a Red and a Black wire, as show below:

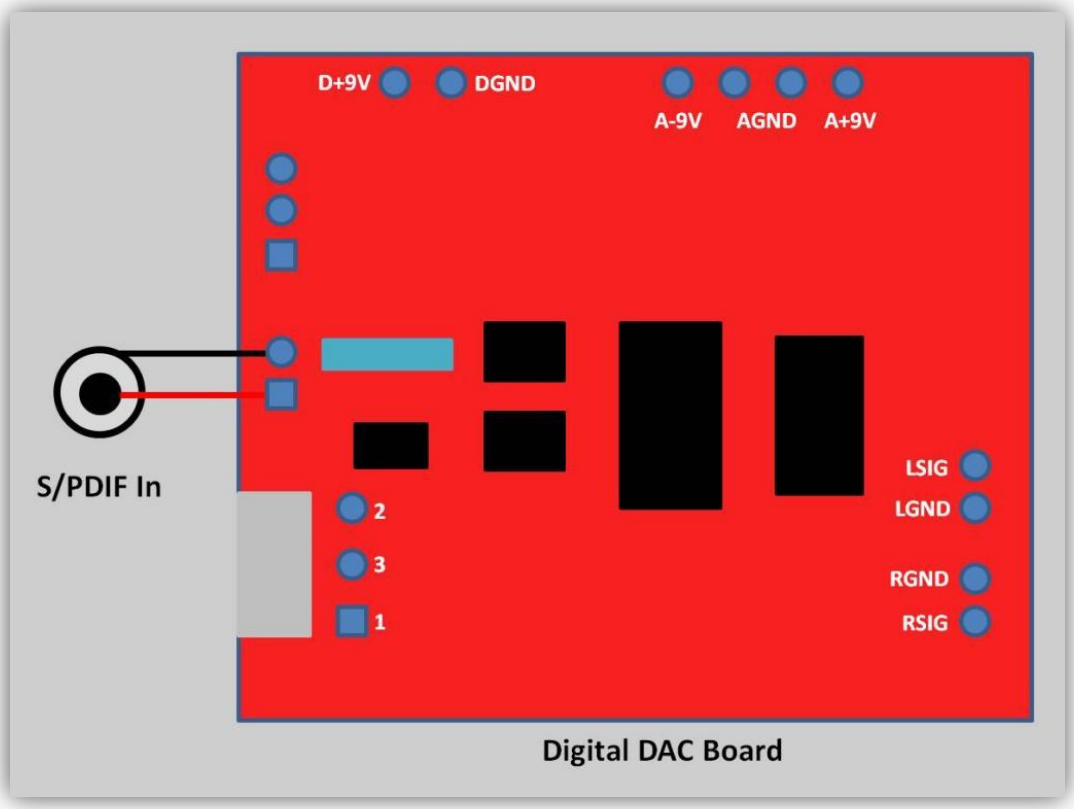

When working with the RCA jacks we use the following procedure (read these tips first, then follow the check off steps below):

- Tin the RCA Red (signal) lead
- Tin the RCA Black (ground) lead and put a puddle of solder in the center of the RCA jack
- Heat the solder puddle and slide the Red tinned lead into the center of it
- Heat the tinned Black lead as it makes contact with the ground tab on the RCA; they will usually adhere immediately

- ☐ Install the single RCA into the back panel *in the top left corner* of the 4 positions available.
- ☐ Solder the Red and Black wires to the RCA jack using the tips above.
- ☐ Connect the other ends of the Red and Black wires to the Digital DAC board as shown in the graphic.

www.AudioNoteKits.com
audionotekits@rogers.com

11.5.2 Connecting the USB Input

Now we'll install the USB board and make the connections to the Digital DAC board.

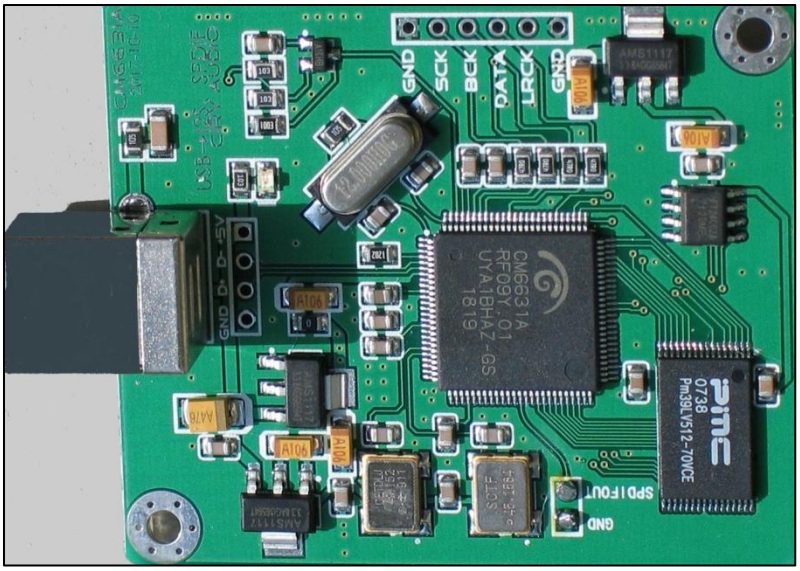

Normally the board you receive should have 2 wires already soldered to the GND and SPDIFOUT connections (the colors don't matter, just so long as the correct connections are made), as in the following picture:

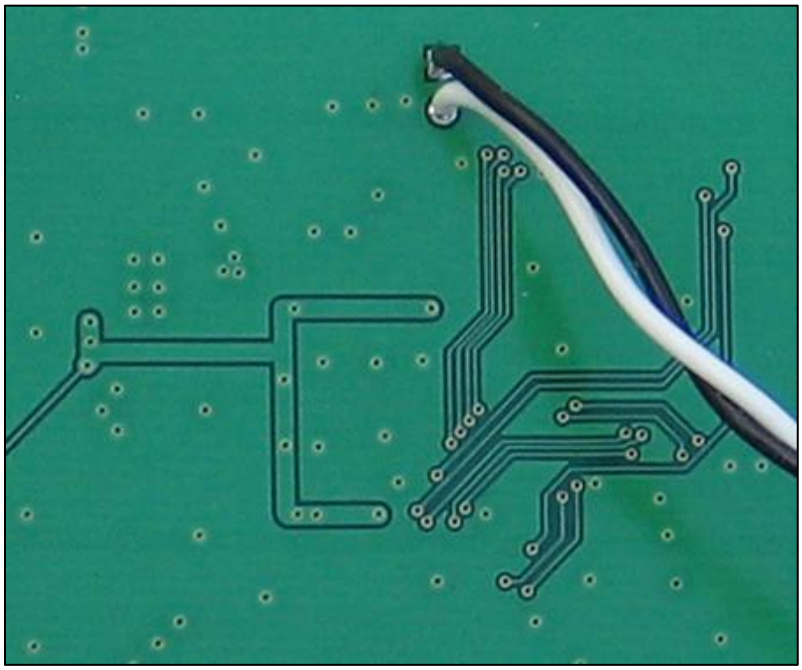

www.AudioNoteKits.com
audionotekits@rogers.com

If, for some reason, you receive a board that does not have those connections already made, make those connections as you complete the connections to the Digital DAC board.
Have a look at the following graphic:

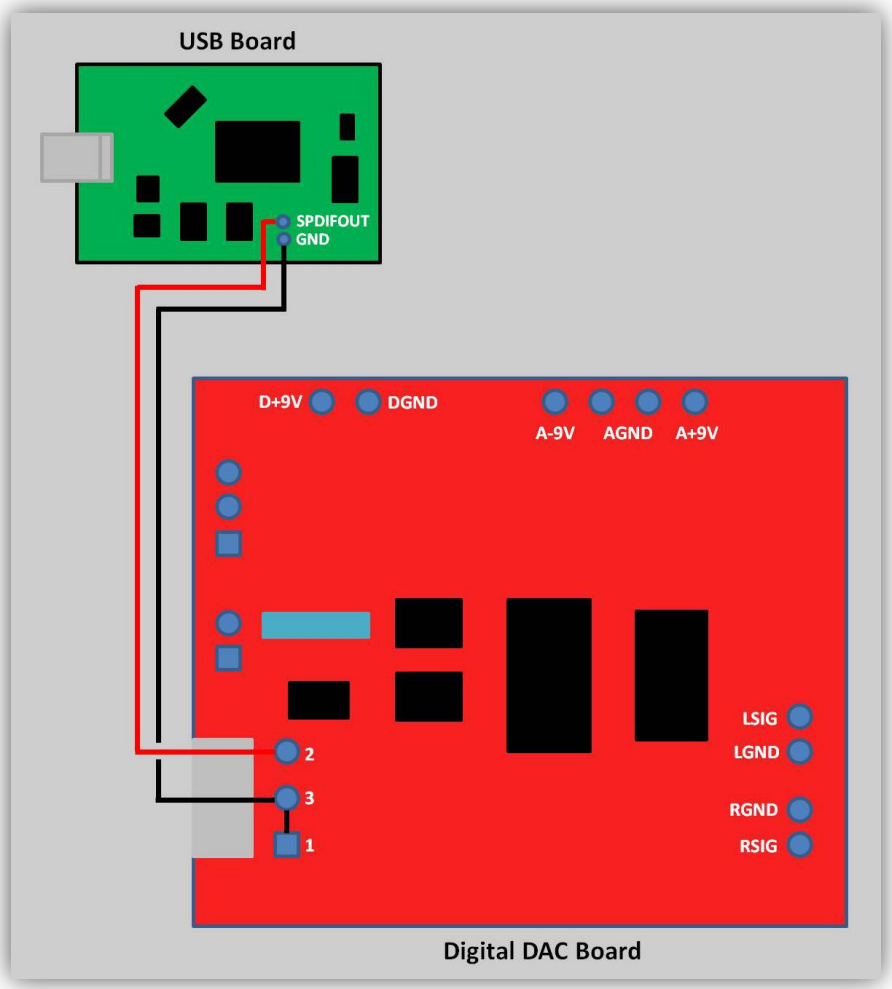

Note the three holes marked '2', '3', and '1'. These are the holes we'll use to connect the USB board to the Digital DAC board.

- ☐ Prepare a small wire of any color ('as long as it's Black!') and bridge holes '1' and '3'. You may want to hold off soldering the '3' hole until the next step.
- ☐ Connect the wire coming from the GND on the USB board to hole '3', along with the end of the bridging wire from the previous step.
- ☐ Connect the wire coming from the SPDIFOUT on the USB board to hole '2'.
- ☐ Finally, attach two standoffs, as you did for the other boards.

www.AudioNoteKits.com
audionotekits@rogers.com

11.5.3 Connecting the XLR Input

If you installing and using the XLR connector, complete the following steps:

☐ Mount the XLR connector in the back of the chassis.

Examine the Digital DAC board and note the three holes marked '2', '3', and '1'. These are the holes we'll use to connect the XLR connector to the Digital DAC board. Now examine the following graphic:

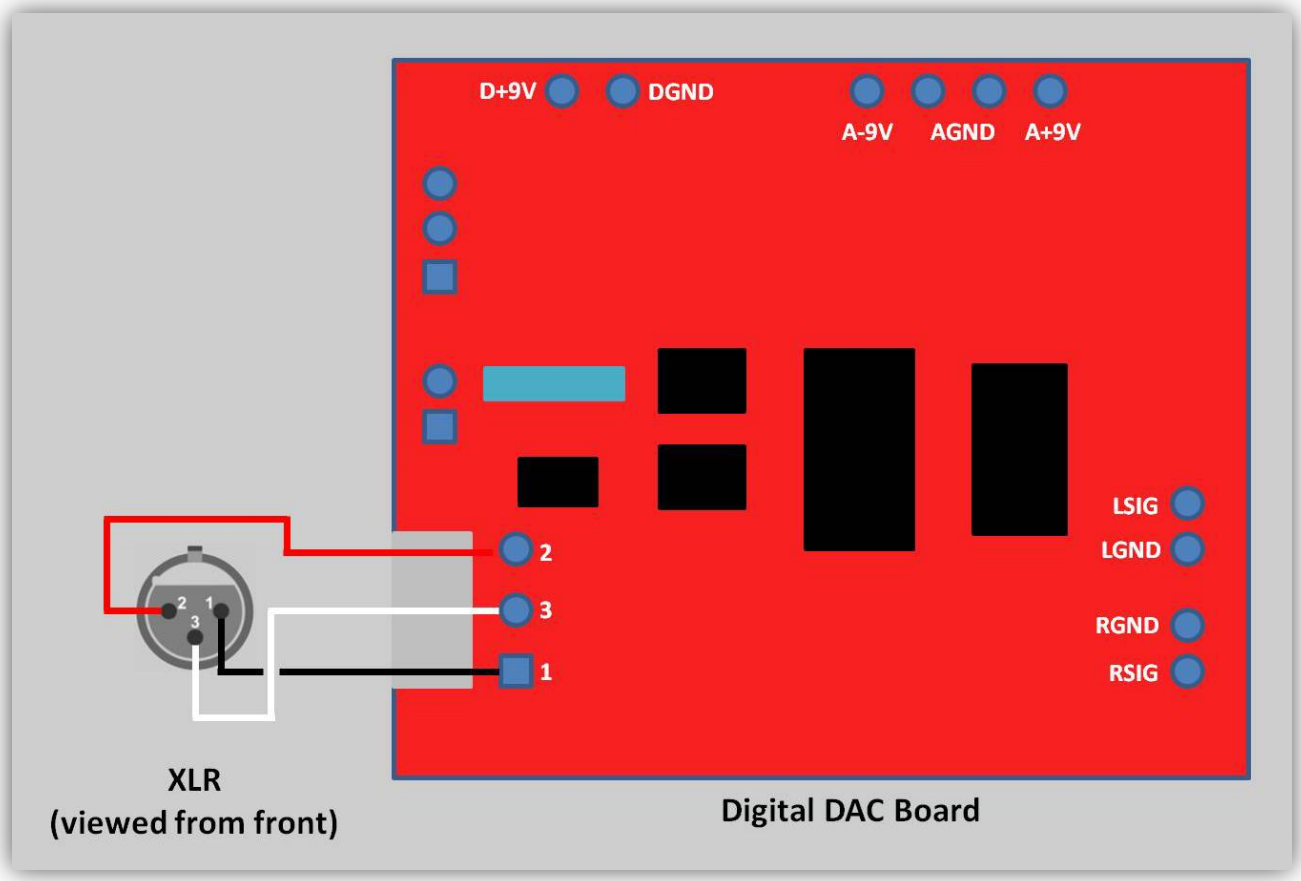

The graphic shows the front view of the XLR connector. Make sure you make the correct connections: we recommend using the continuity setting on your multimeter to double check, as it's easy to get this wrong.

☐ Connect a Black wire from pin '1' on the XLR jack to hole '1' on the DAC Digital board.

☐ Connect a Red wire from pin '2' on the XLR jack to hole '2' on the DAC Digital board.

☐ Connect a White wire from pin '3' on the XLR jack to hole '3' on the DAC Digital board.

www.AudioNoteKits.com
audionotekits@rogers.com

Section 12

Wiring the Output Connections

12.1 Wiring the Output Connections

This section refers to the installation of the Yellow AN-A cable from the Analog board to the RCA output jacks on the rear of the chassis. Before you do this wiring, please review the tips we offered in Section 11.4.1 regarding how best to solder to an RCA jack.

☐ Take the AN-A cable. The cable has Red and White leads and a thick shield.

➡ *Look carefully at the following graphic. Note that we will connect the shields to the left and right grounds (LOUTGND and ROUTGND) on the Analog board BUT we will* ***not*** *connect the other ends of those shields to the RCA jacks.*

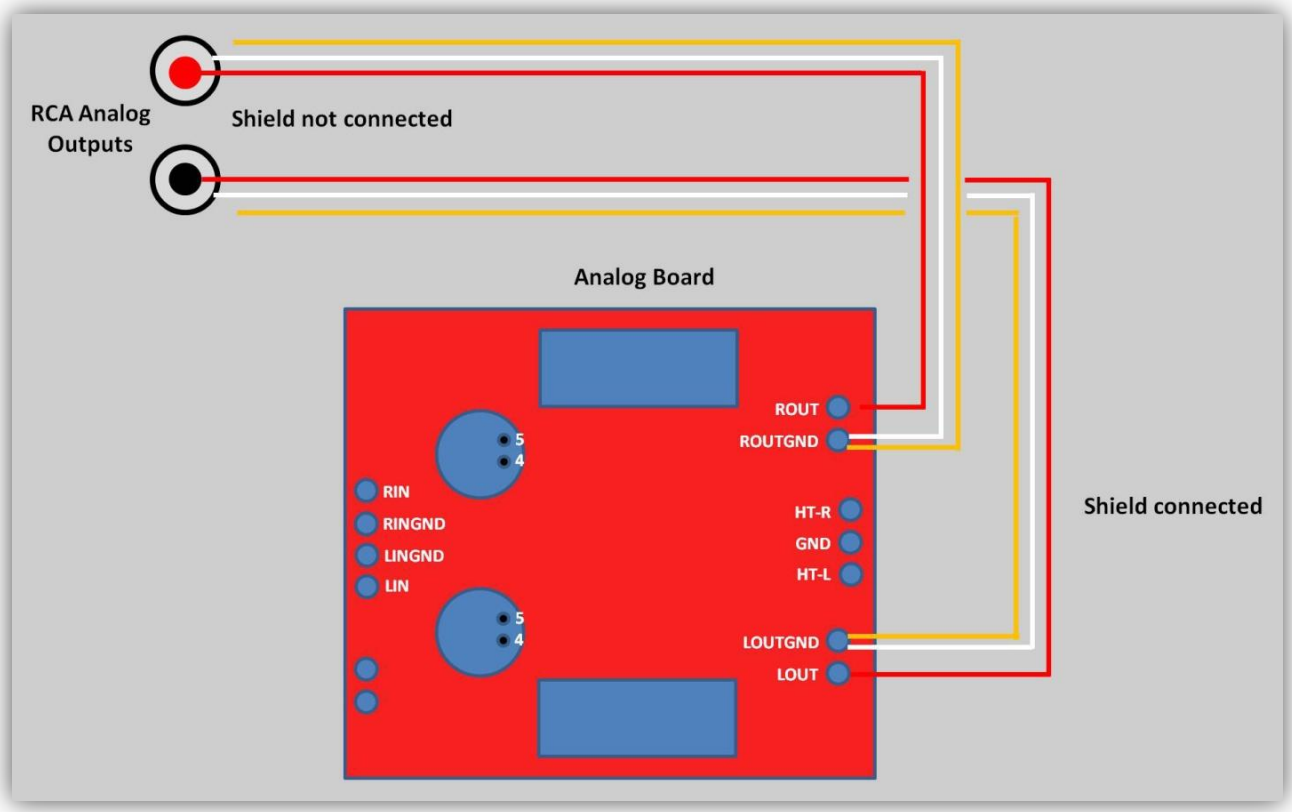

www.AudioNoteKits.com
audionotekits@rogers.com

Let's begin by wiring the RCA connectors (see picture below); if you like, you can add a little heatshrink, as shown, to mask the end of the shield.

➡ *As you prepare the leads, don't cut the AN-A cable too short (allow a little 'extra') and don't be too forceful when stripping the inner wires (in particular); you can easily cut the wire completely and possibly end up with a too-short AN-A cable.*

- ☐ Prepare one end of the AN-A cable: expose about 3/16ths of an inch of the Red and White leads and cut off the shield at its exposed 'root'.
- ☐ Connect the Red wire to the signal tab (center) of the RCA jack.
- ☐ Connect the White wire to the ground tab of the RCA jack.
- ☐ Repeat the above two steps for the other RCA jack.

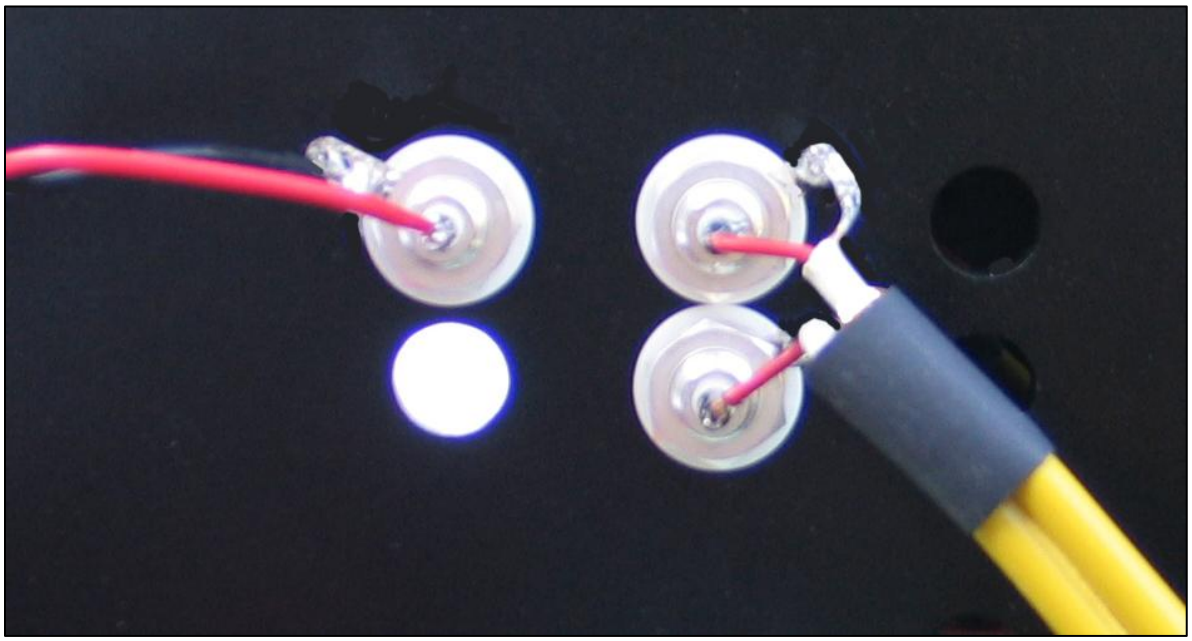

Now let's make the connections to the Analog board. First, though, prepare the Red and White leads and peel back and prepare the shield. Try to make the White wire and the shield the same length as they will be soldered together to the GND tabs.

- ☐ Connect the Red (signal) wire coming from the Red RCA jack to ROUT on the Digital DAC board.
- ☐ Connect the White (ground) wire coming from the Red RCA jack and the shield to ROUTGND.
- ☐ Repeat the above two steps for the Left channel (the Black RCA jack), making the connections to LOUT and LOUTGND.

www.AudioNoteKits.com
audionotekits@rogers.com

Section 13

Turn-on Procedure

13.1 Turn-on

At this point we should just about be finished — we have two working power supplies.

Now we can turn the DAC on. Let's check the following voltages on the Digital DAC board:

Red Lead (Test Point)	Approximate Reading
A–9V	–9V DC
A+9V	+9V DC
D+9V	+9V DC

If all is well, let's input a digital source.

We've provided you with an audio test CD with one track on it that generates a 1KHz sine wave. (You can also get a one hour 1KHz test tone on YouTube[4], if you prefer) This will allow you to get a solid AC voltage measurement at the output of the DAC.

- ☐ Plug in a digital source using a 75 ohm RCA cable (or any spare RCA cable[5] for now) into the DAC. You may hear the relay chatter when you first connect it — that is, as the Digital DAC board receives a digital signal. If the chattering continues power down the DAC and power on again in a few seconds: all should be well.
- ☐ Connect the analog outputs to a line level pre-amplifier or an integrated amplifier and check to hear the sound.

➡ *The M2 Power Supply can take up to 45 seconds to turn on so be patient when you are waiting for the music to play.*

Congratulations if you have a working DAC 2.1 Signature! Feel free to contact us to share your excitement or if you are having any problems debugging things.

[4] https://www.youtube.com/watch?v=3FBijeNg_Gs

[5] An audio RCA cable is not the same as a coaxial digital cable with an RCA termination. When you actually insert the DAC in your system, use a 75 ohm coaxial cable.

www.AudioNoteKits.com
audionotekits@rogers.com

13.2 Debugging

If you have no sound coming out of your DAC then the best place to start is with doing some basic checks.

Re-check the DC voltages coming into the Digital DAC board:

Location	Approximate Reading
Between A+ and AGND	+9V DC
Between D+ and DGND	+9V DC
Between A– and AGND	–9V DC

Re-check the M2 Power Supply voltages:

Location	Approximate Reading
B+ to GND	260V DC
+6V2–	6.3V DC
+6V2–	6.3V DC

Location	Approximate Reading
300 300	> 600 AC
13V6 13V6	8V AC

Using the 1KHz sine wave test tone on the CD or another source,

- ☐ Check for an AC voltage reading at the input of the Analog board: using the CD test tone you should get approximately 37mv RMS on 'AC'. At the output of the 6922 you should get approximately 1V RMS on 'AC'.
- ☐ You can also check to see if the signal is making it all the way through the AN-A cable to the output of the DAC by checking the AC voltage on the signal and ground of one of the analog output RCAs.

If these voltages and tests are correct then contact ANK Audio Kits at audionotekits@rogers.com. We'll figure things out.

Section 14

Finishing Touches

14.1 Installing the Front Faceplate

- ☐ Remove the protective films from the front and back of the front faceplate.
- ☐ Install the front faceplate using four Black M4 CSK flat head screws.

14.2 Installing the LED

- ☐ Carefully trim the LED leads so that they are not exposed.

➡ *It's a good idea to trim the NEGATIVE lead a bit shorter than the POSITIVE lead so that, if you need to remove the LED later for any reason, you'll know which is the POSITIVE lead (the longer lead) and will be able to reinsert it correctly.*

- ☐ Glue or attach (with some Blue Tack) the LED holder to the front panel so that the LED protrudes through the designated hole, as shown below:

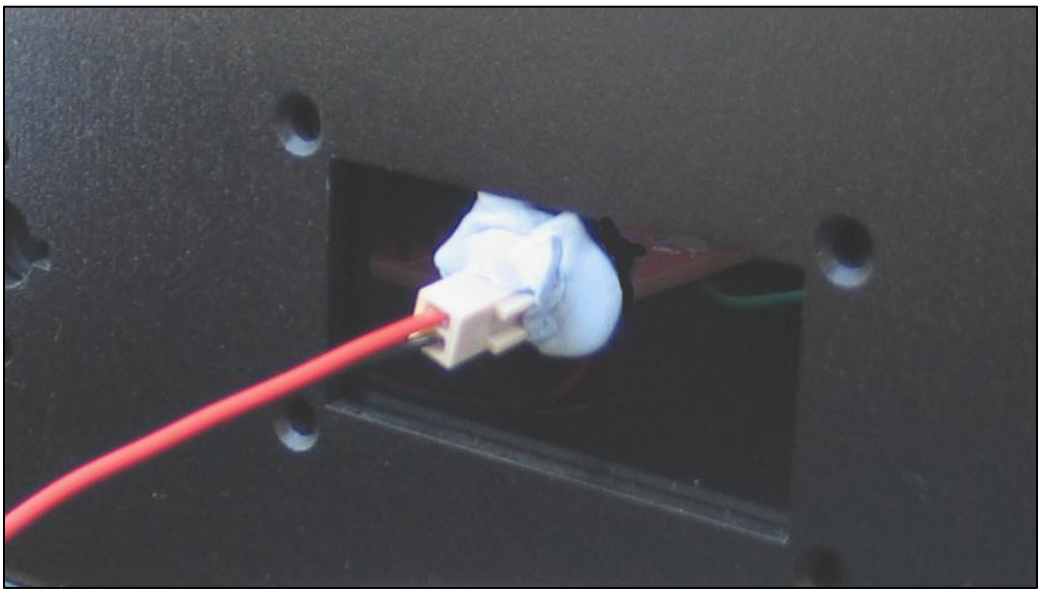

14.3 Installing the Chassis Top

- ☐ Install the chassis top using the provided hardware.

www.AudioNoteKits.com
audionotekits@rogers.com

Section 15

Final Thoughts

15.1 Congratulations

If you've made it to this point then CONGRATULATIONS! — you are ready to insert your DAC into your system and enjoy it.

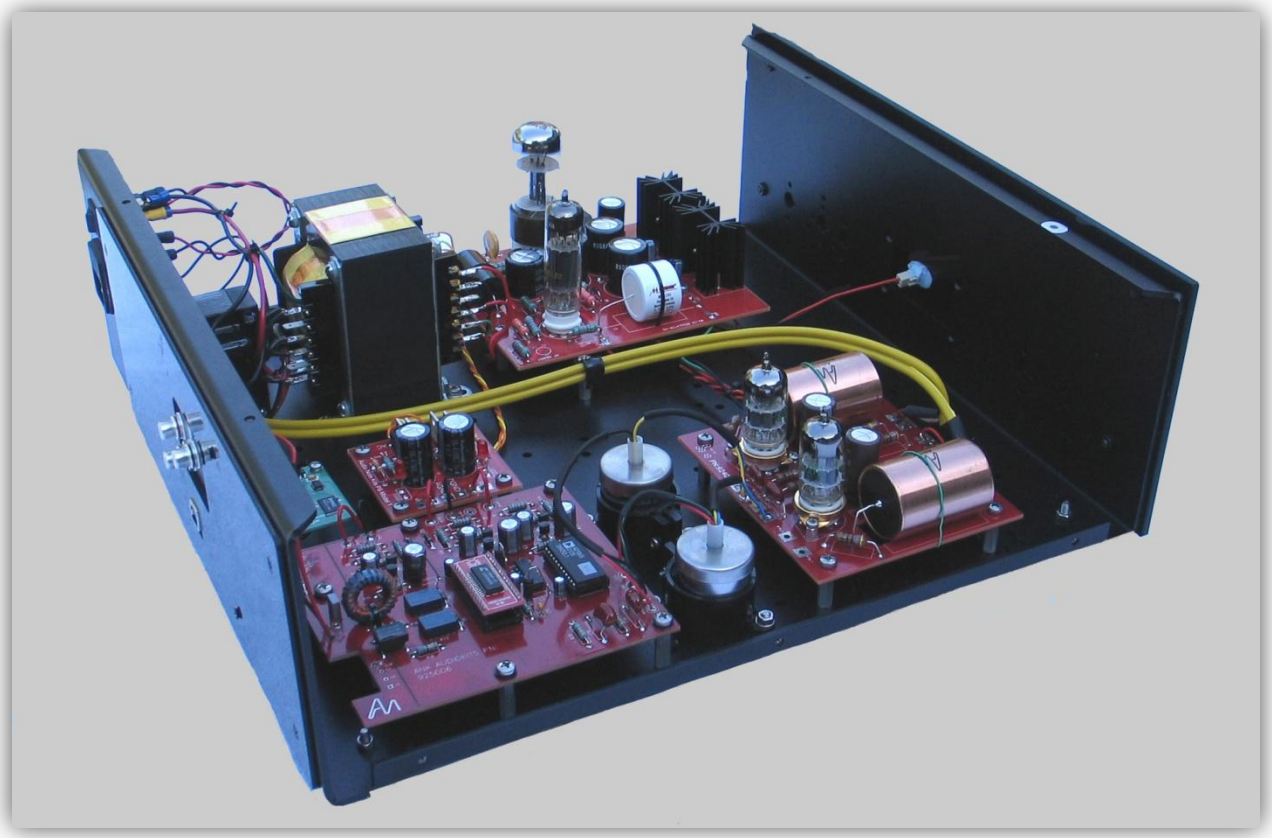

15.2 System Configuration Options

The ANK Audio Kits DAC 2.1 Signature can be connected either to a preamplifier or directly to an amplifier which has a volume control, like our fine new L4 Headphone Amplifier C-Core, which has two attenuators and input buffering. For what it's worth, for reasons that remain somewhat of a mystery, we like to listen with a preamplifier in the system. Choose whichever option works best in your system.

www.AudioNoteKits.com
audionotekits@rogers.com

15.3 Cables

In our experience, high quality cables make a difference. A good power cable should make a noticeable improvement to the sound, and the digital and analog interconnects do as well. For example, a quality 75 ohm (typically RG-59/U) impedance coaxial S/PDIF cable provides a wide bandwidth and a good impedance match. This helps to ensure the integrity of the digital signal square wave, minimizing the likelihood of data corruption (EFI and RFI interference, particularly) and enabling reasonably long cable lengths.

15.4 Tube Rolling

15.4.1 6922

The sound of the ANK Audio Kits DAC 2.1 Signature is very highly regarded and it is one of our most popular kits. It provides a detailed and transparent presentation with gorgeous sonics. Rolling some nice NOS tubes will allow you to tailor the sound to your particular preferences. The 6922 dual triode tube can be substituted by the readily available 6DJ8 at very reasonable prices. *Before considering any tube substitution other than a 6DJ8 please mail me at audionotekits@rogers.com to discuss it.*

15.4.2 6X5 and ECL82

The kit comes with a NOS Russian military equivalent of the 6X5, a 6U5C rectifier made by Reflector. Should you wish to substitute this, there is an ample supply of NOS 6X5, 6X5GT, or 6X5WGT rectifiers available at reasonable prices. *Do not substitute any other 5V rectifier for the 6X5/EZ35type for which this amplifier was designed;* there are some significant differences between a 6X5 and other rectifiers, with respect to voltage drop and current specifications, and the result of a substitution is unpredictable and could damage your DAC.

The ECL82 triode and beam tetrode tube can be substituted by readily available 6BM8 tubes.

15.5 Thanks

Thank you for investing in the ANK Audio Kits DAC 2.1 Signature and congratulations on working your way through the build. The kit is quite complex and we would welcome your feedback. Please email us at audionotekits@rogers.com and let us know how everything went: were there any errors in the manual or instructions, parts lists, etc.? Your ideas regarding greater clarity or tweaks will also be truly appreciated.

If you have some suggestions that you feel would help other kit builders please also let us know. We can put them on a DAC support page for other users. We'd also like to see some great pictures of your build process or your final build. We can post them on our website or on our Facebook page. And we'd love a review from you regarding the sound.

We hope the unit brings you many years of joy and we look forward to hearing from you.

Appendix

www.AudioNoteKits.com
audionotekits@rogers.com

A.1 World Mains Voltages Wiring Diagrams

AC Power On/Off (120V)

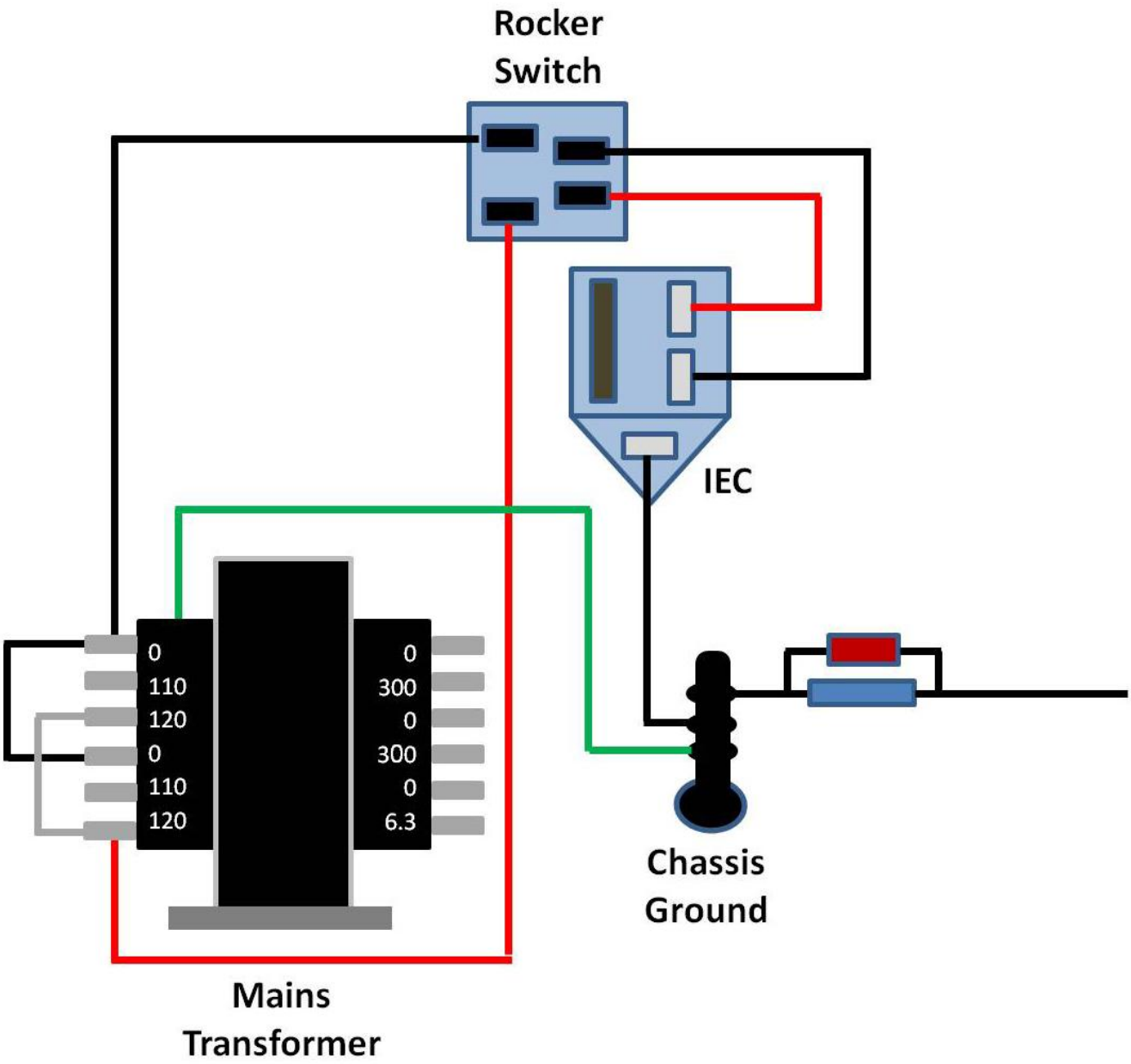

www.AudioNoteKits.com
audionotekits@rogers.com

AC Power On/Off (110V)

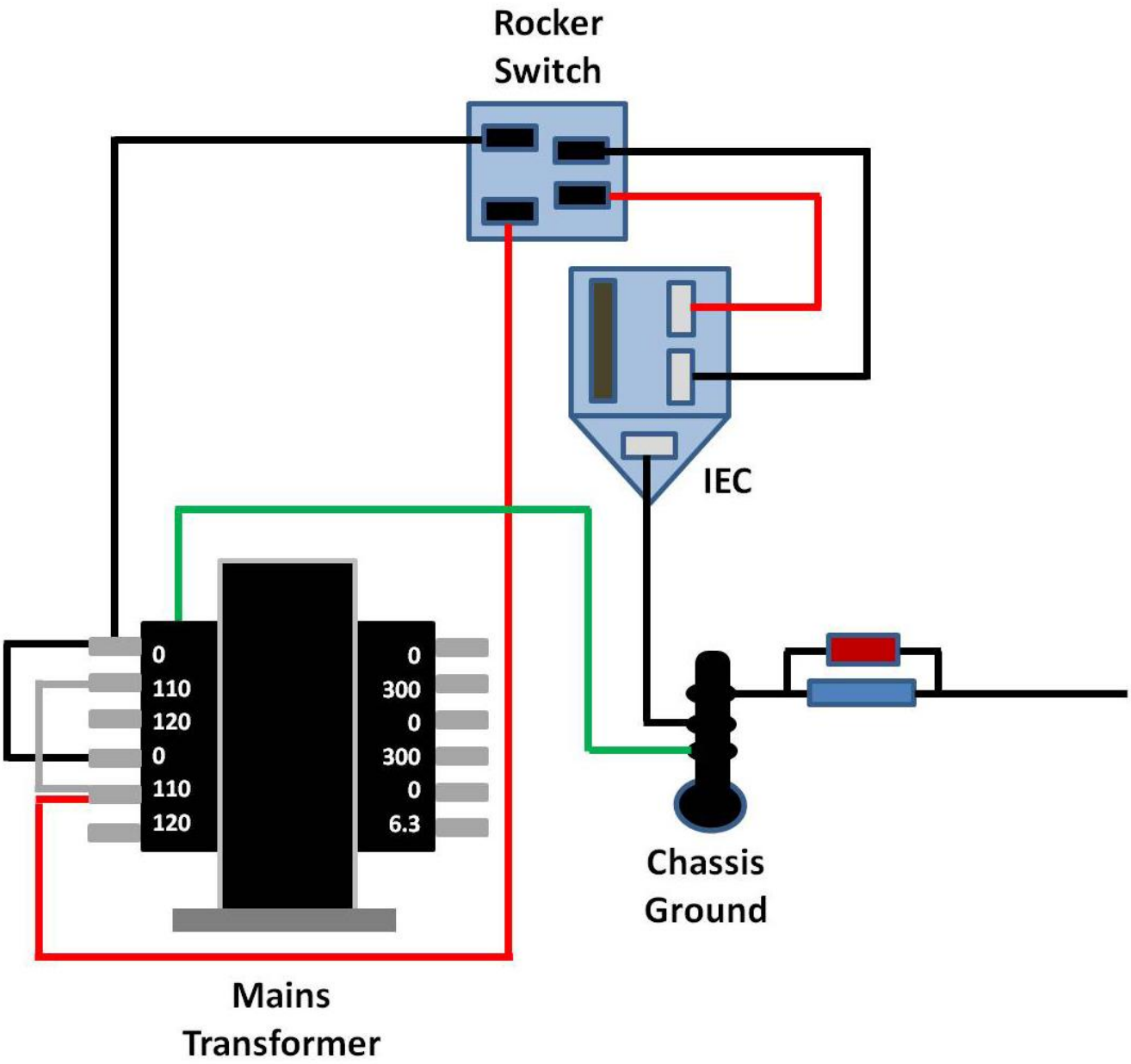

www.AudioNoteKits.com
audionotekits@rogers.com

AC Power On/Off (240V, UK)

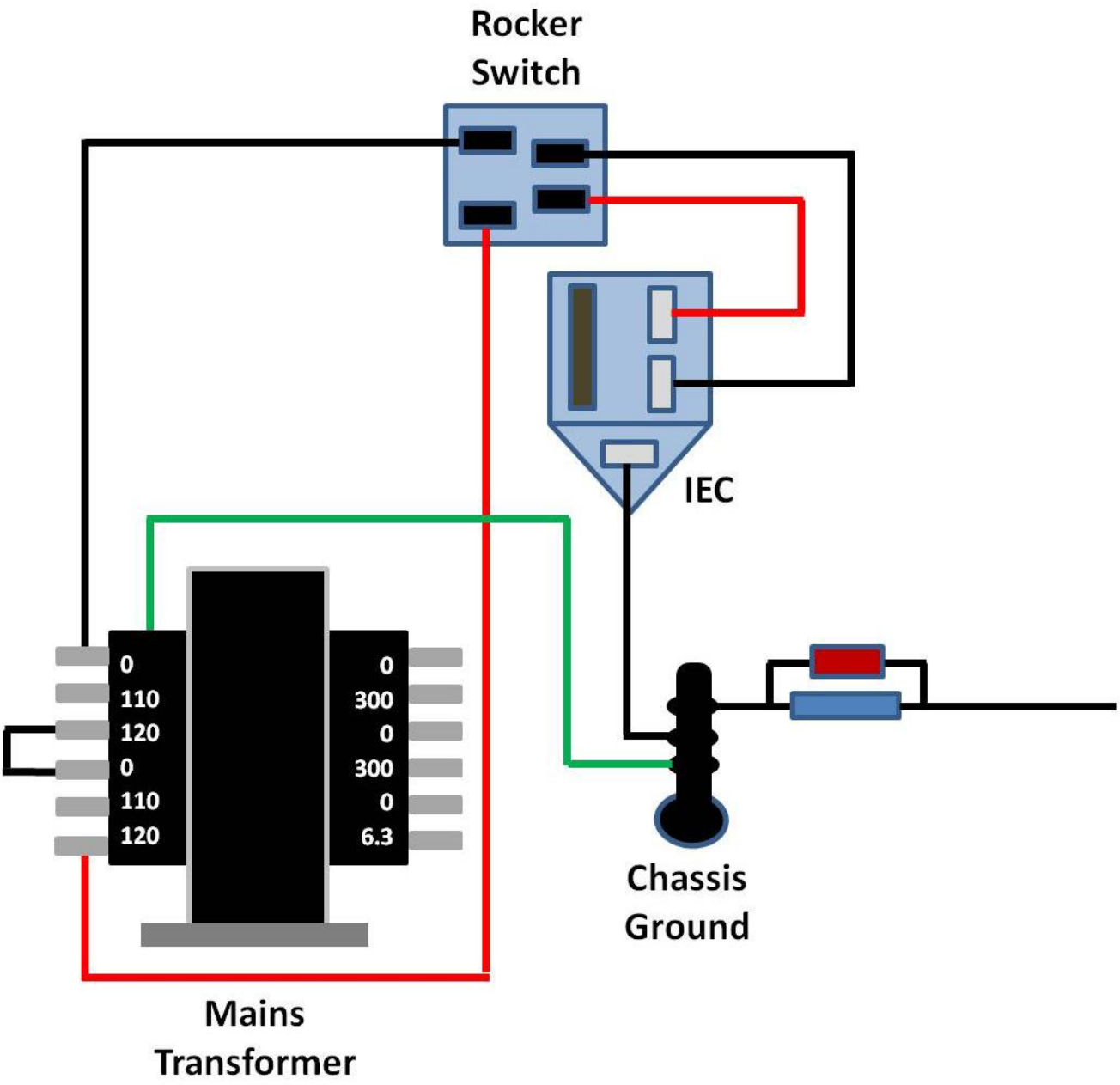

www.AudioNoteKits.com
audionotekits@rogers.com

AC Power On/Off (220V)

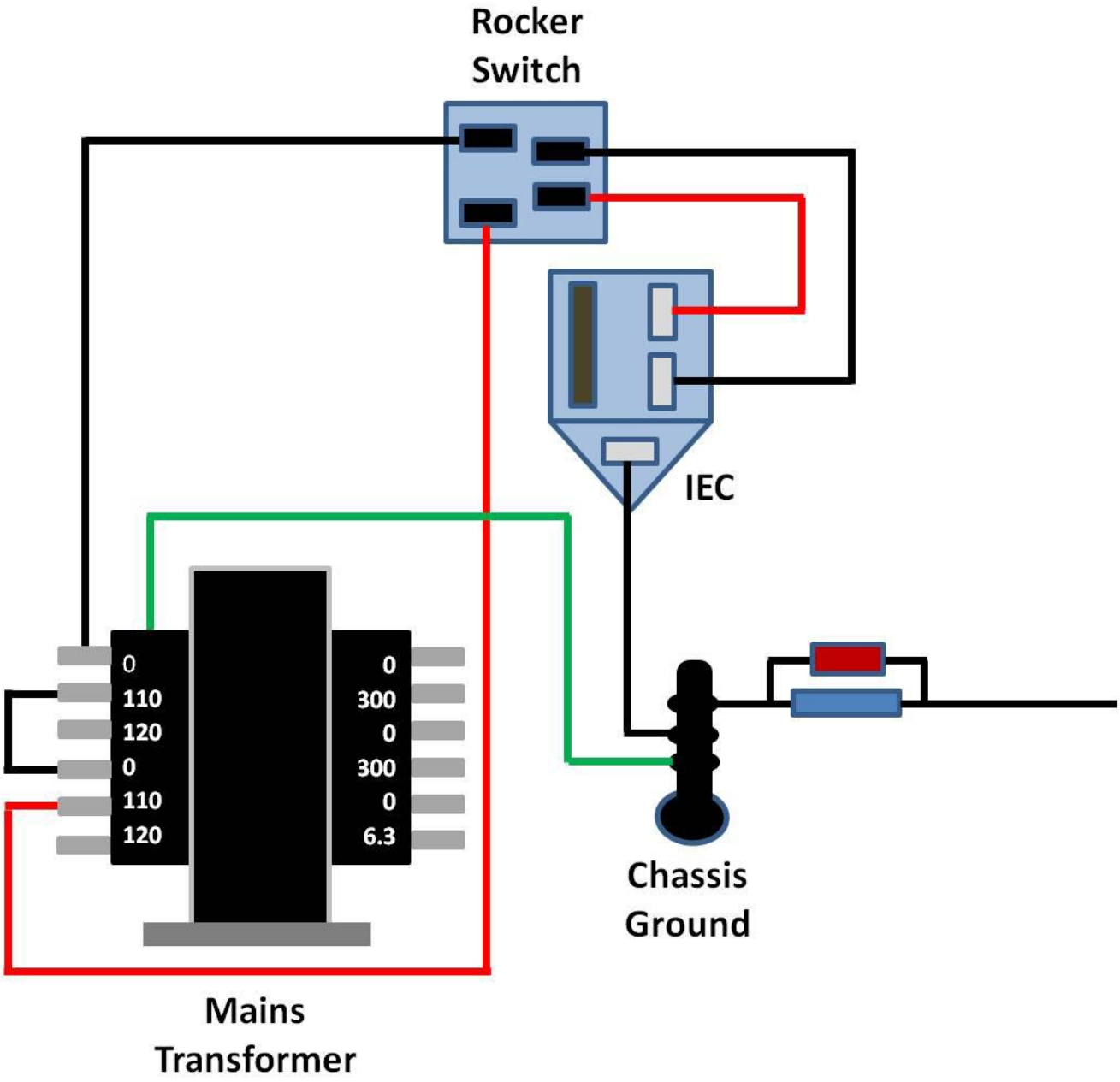

www.AudioNoteKits.com
audionotekits@rogers.com

AC Power On/Off (230V)

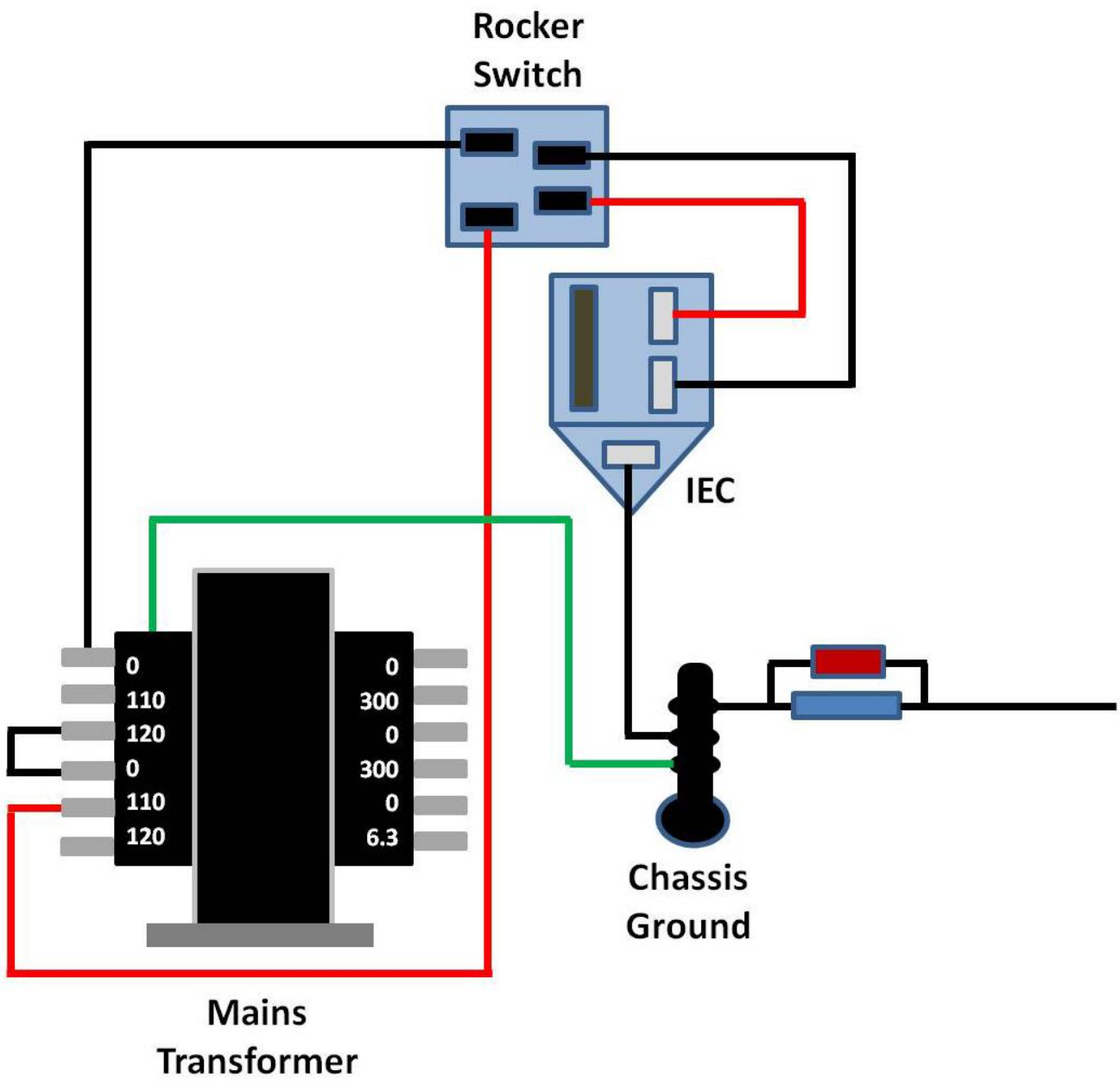

www.AudioNoteKits.com
audionotekits@rogers.com

Resistor Color Codes (5 band)

Black	- 0
Brown	- 1
Red	- 2
Orange	- 3
Yellow	- 4
Green	- 5
Blue	- 6
Violet	- 7
Grey	- 8
White	- 9

Resistor color codes are read from the color that is nearest the edge of the resistor - that is treated as the first column.

The first column of a 5-band resistor is the 100's column, followed by a 10's column, followed by a units column.

The fourth band is a multiplier (or decimal point shifter). The multiplier can use the additional colors silver and gold. These are used for very small values and turn the multiplier into 0.01(silver) and 0.1 (gold). For the standard colors, it determines how many times the column value is shifted to the left (i.e. multiplied by 10)

The fifth column is a tolerance value. These can be quite complex but we will not concern ourselves with these.

Examples

100R	1	0	0	x 1
680R	6	8	0	x 1
820R	8	2	0	x 1
1K	1	0	0	x 10
2K2	2	2	0	x 10
2K7	2	7	0	x 10
3K3	3	3	0	x 10

10K	1	0	0	x 100
68K	6	8	0	x 100
82K	8	2	0	x 100
330K	3	3	0	x 1,000
220K	2	2	0	x 1,000
470K	4	7	0	x 1,000
1M	1	0	0	x 10,000

You can also find an 'Interactive Resistor Color Code Calculator' on our website (available from the Links page).

www.AudioNoteKits.com
audionotekits@rogers.com